RV College of Engineering®

Go, change the world®

Department of Mechanical Engineering
RV College of Engineering®, Bengaluru – 560059

ELEMENTS OF MECHANICAL ENGINEERING-(2025 scheme)

UNIT-V

Hybrid Drives, Mechatronics & Robotics

Overview

- What is an HEV?
- Introduction to hybrid vehicles
- Configurations
- EV/ICEV comparison
- Classification of hybrid electric vehicles
- Components
- mechanical & electrical characteristics
- batteries & battery management systems
- control module

Introduction to HEV

A Hybrid Electric Vehicle (HEV) is an automobile that combines the conventional Internal Combustion Engine (ICE) with Electric Drive System.

In simple terms, it uses two energy sources

1. Petrol/Diesel fuel tank powering the ICE.
2. Battery pack powering one or more electric motors.

Both systems can:

- Work independently (electric motor for low speed, ICE for high speed).
- Work together for better acceleration and performance.

The concept was introduced to reduce fuel consumption, improve efficiency, and minimize environmental impact, while still keeping the convenience and range of fuel-based cars.

HEV Objectives

Objectives the HEV wants to obtain:

- Maximize fuel economy
- Minimize emissions
- Minimize propulsion system cost to keep affordable
- Maintain acceptable performance with a reasonable cost
- Reduce the conventional car weight

Origin of HEVs

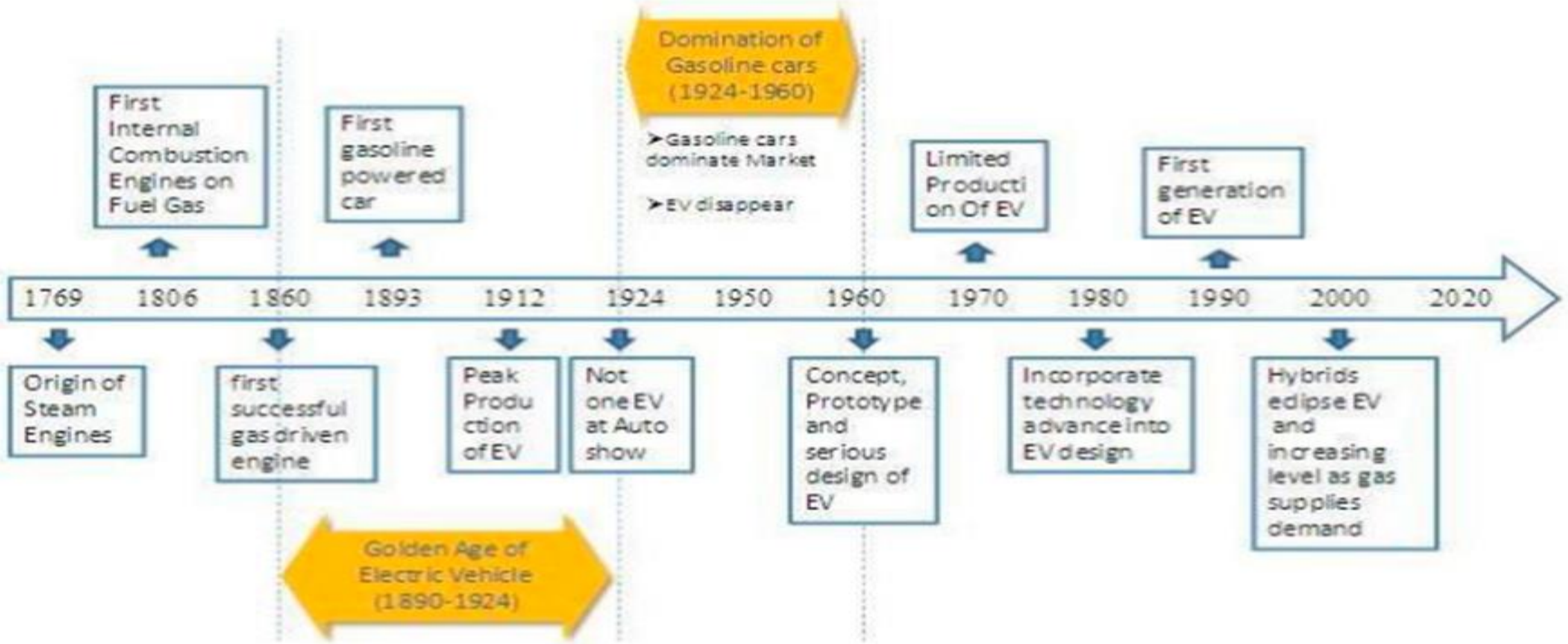

Historical development of automobile and development of interest and activity in the EV from 1890 to present day. Electric Vehicle merged into hybrid electric vehicle.

Well to Wheel Analysis

- Well-to-wheels efficiency is a combination of well-to-vehicle and vehicle-to-wheels efficiencies
- Well-to-wheel is a analysis of all the efficiencies right from fuel extraction to transportation to supply to storing in a fuel tank of a vehicle and tail pipe emissions.
- EVs have zero tailpipe emissions, but emissions are produced by the source of electrical power, such as a power plant.

Direct and Well-to-Wheel Analysis

- Well-to-wheel analysis **include all emissions** related to fuel production, processing, distribution and combustion
- In case of gasoline, emissions are produced while extracting petroleum from the earth, refining it, distributing the fuel to stations, and burning it in vehicles
- In case of electricity, most electric power plants produce emissions, and there are **additional emissions** associated with the extraction, processing, and distribution of the primary energy sources they use for electricity production
- **Batteries - Where it comes from and where it goes**
- **Recycling and final disposal of batteries** and its consequences on the environment is also considered even before manufacturing

Advantages of HEV Over Conventional Engines

- **Fuel Efficiency –** HEVs combine an internal combustion engine with an electric motor, reducing overall fuel consumption, especially in city driving with frequent stop-and-go.
- **Lower Emissions –** Reduced fuel usage leads to lower greenhouse gas (GHG) emissions and pollutants compared to conventional vehicles.
- **Regenerative Braking–** HEVs recover and store energy during braking, which improves efficiency and reduces brake wear.
- **Reduced Dependency-** on Fossil Fuels– By partially relying on electric power, HEVs decrease dependence on petroleum-based fuels.
- **Better Performance-** in Traffic– Electric motors provide instant torque, improving acceleration and efficiency in urban driving conditions.
- **Cost Savings –** Though initial costs are higher, lower fuel and maintenance expenses often reduce lifetime operating costs.
- **Quieter Operation –** In electric-only mode, HEVs operate with reduced noise compared to traditional ICE vehicles.
- **Extended Driving Range Compared to Pure EVs –** Unlike full electric vehicles, HEVs are not limited by battery range, as the engine supports long-distance driving.

Components of HEV

Internal Combustion Engine (ICE) – Runs on petrol or diesel and provides power when required.

Electric Motor/Generator – Works as both motor (to drive wheels) and generator (to recharge battery during braking).

Battery Pack – Stores electrical energy for the motor; usually a high-voltage rechargeable battery.

Power Electronics Controller (Inverter/Converter) – Manages power flow between battery, motor, and generator.

Transmission System – Transfers power from engine/motor to the wheels (can be automatic, CVT, or special hybrid transmissions).

Fuel Tank – Stores fuel for the ICE.

Regenerative Braking System – Captures kinetic energy during braking and converts it into electricity to recharge the battery.

Control Unit (Hybrid Control ECU) – The brain of the HEV; decides when to use the motor, engine, or both for best efficiency.

Traction Motor in HEV

It Provides propulsion power to the wheels using electrical energy stored in the battery and also Works as a motor (for driving) and as a generator (during regenerative braking to recharge the battery). Traction motors are used in **electrically** powered vehicles such as electric vehicles and electric locomotives

Types of motor generally Used:

- DC Motor (older systems)
- AC Induction Motor
- Permanent Magnet Synchronous Motor (PMSM)

Traction Motor in HEV

Primary Propulsion Unit– The traction motor converts electrical energy from the battery into mechanical energy to drive the wheels.

Regenerative Function– It acts as a generator during braking, recovering kinetic energy and recharging the battery.

Instant Torque Delivery – Provides quick acceleration and smooth performance, especially in city driving conditions.

Motor Types – Commonly used motors include Permanent Magnet Synchronous Motors (PMSM), AC Induction Motors, and Brushless DC Motors.

Efficiency & Reliability – Operates with high efficiency, low noise, and requires less maintenance compared to internal combustion engines.

Integration with Control System – The hybrid control unit manages when the traction motor operates alone, with the engine, or in regeneration mode.

Component- Traction Motor in HEV

Primary Propulsion Unit– The traction motor converts electrical energy from the battery into mechanical energy to drive the wheels.

Regenerative Function– It acts as a generator during braking, recovering kinetic energy and recharging the battery.

Instant Torque Delivery – Provides quick acceleration and smooth performance, especially in city driving conditions.

Motor Types – Commonly used motors include Permanent Magnet Synchronous Motors (PMSM), AC Induction Motors, and Brushless DC Motors.

Efficiency & Reliability – Operates with high efficiency, low noise, and requires less maintenance compared to internal combustion engines.

Integration with Control System – The hybrid control unit manages when the traction motor operates alone, with the engine, or in regeneration mode.

Mechanical characteristics of traction motors

- **Torque–Speed Characteristic –** Delivers **high starting torque** at low speed for vehicle launch and maintains adequate torque over a wide speed range.
- **Acceleration Ability–** Smooth acceleration without jerks, supporting quick response in traffic conditions.
- **Load Handling –** Capable of handling frequent and sudden load changes (e.g., gradients, stop-and-go driving).
- **Reversibility–** Motor can run in directions, enabling forward and reverse vehicle motion.
- **Braking Capability–** Provides regenerative braking (mechanical energy converted to electrical energy) and dynamic braking.
- **Durability & Strength–** Designed to withstand vibrations, shocks, and mechanical stresses of road conditions.

Electrical characteristics of traction motors

- **High Starting Current–** Requires a large inrush current at startup to produce the high torque needed for vehicle acceleration.
- **Variable Voltage & Frequency Operation–** Controlled by power electronics (inverter/converter) to regulate speed and torque.
- **High Efficiency–** Ensures minimal electrical losses during energy conversion, improving vehicle range.
- **Regenerative Capability–** During braking, the motor acts as a generator, converting mechanical energy back into electrical energy.
- **Power Factor Consideration–** AC traction motors (like induction or PMSM) require control to maintain a good power factor.
- **Overload Capacity–** Can withstand short-term overloads (sudden high torque demand) without damage.
- **Smooth Speed Control–** Offers precise and stepless control of motor speed via electronic controllers.

Features of Hybrid Vehicle System

Less pollution, Lower Co2, reduced Green House Gas

Dual propulsion systems

Fuel and Electric energy

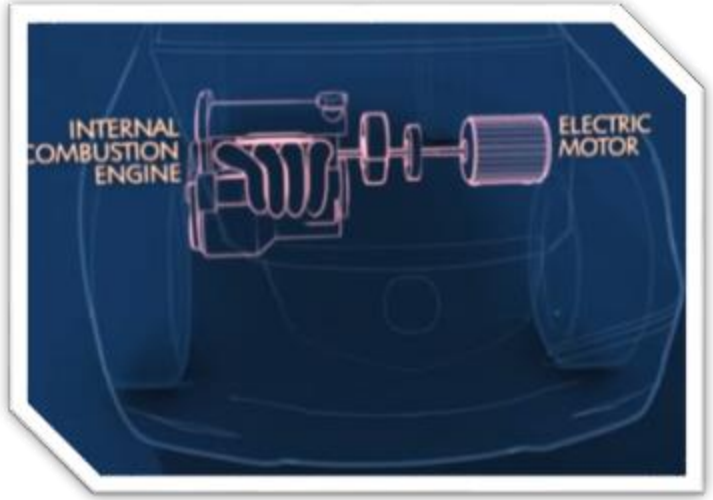

Internal Combustion engine and electric motor

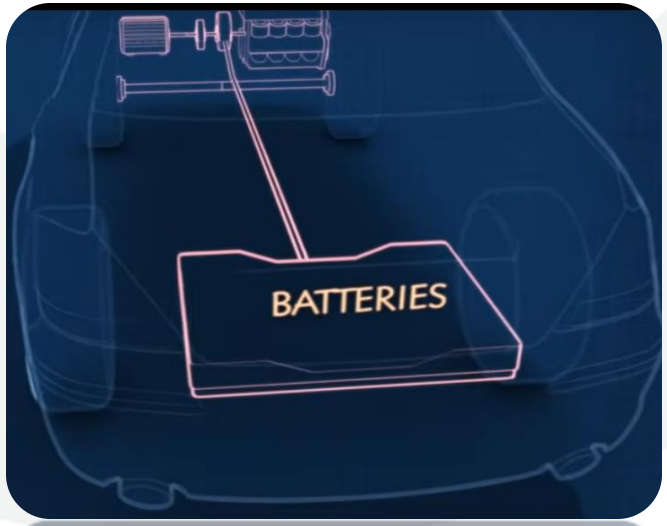

Battery pack to drive electric motor

Component- Battery

- **Energy Storage Unit–** Stores electrical energy to power the traction motor.
- **Rechargeable–** Recharged via the internal combustion engine, regenerative braking, or external charging (in plug-in hybrids).
- **High Voltage Pack–** Provides the necessary voltage and current for efficient motor operation.
- **Types Used–** Common types are Nickel-Metal Hydride (NiMH), Lithium-Ion (Li-Ion), and in some cases Lead-Acid (older designs).
- **5Role in Efficiency–** Supports fuel economy by reducing dependence on the internal combustion engine.
- **Safety & Management–** Controlled by a Battery Management System (BMS) to ensure safe charging, discharging, and temperature regulation.

Battery- Classification

Batteries for HEVs can be broadly classified into:

1. **Primary Batteries (non-rechargeable):** Used in simple electronics, **not suitable for HEVs.
2. **Secondary Batteries (rechargeable – used in HEVs/EVs)**

a. Nickel-Metal Hydride (NiMH):

- High durability, reliable, moderate energy density.
- Used in early HEVs (e.g., Toyota Prius).

b. Lithium-Ion (Li-ion):

- High energy density, lighter, efficient, dominant in modern HEVs/EVs.
- **Variants:** LFP (Lithium Iron Phosphate), NMC (Nickel Manganese Cobalt).

c. Lead-Acid:

- Low cost but heavy, limited cycle life.
- Used only as auxiliary batteries, not for traction.

BATTERY MANAGEMENT SYSTEM (BMS):

The BMS is the electronic control system that manages the safe and efficient operation of the battery pack. It ensures performance, safety, and long battery life.

Functions of BMS:

1. Monitoring:

Tracks battery voltage, current, and temperature.

Estimates State of Charge (SOC) (remaining capacity) and State of Health (SOH) (overall condition).

2. Protection:

Prevents overcharging, deep discharging, overheating, and short-circuits.

Ensures cells operate within safe voltage and temperature limits.

3. Balancing:

Maintains equal charge levels across all cells (cell balancing).

Avoids performance loss due to cell mismatch.

4. Communication & Control:

Communicates with the Vehicle Control Unit (VCU)** or ECU.

Coordinates with charging system, regenerative braking, and traction motor.

5. Thermal Management:

Works with cooling/heating systems to maintain optimum temperature.

Component- Invertor

- **DC to AC Conversion–** Converts the DC power from the battery into AC power required by the traction motor (usually induction or PMSM).
- **Bidirectional Operation–** Works both ways: supplies AC to the motor for propulsion and converts AC (from regenerative braking) back to DC to recharge the battery.
- **Motor Control–** Controls motor speed and torque by adjusting voltage, frequency, and phase of the AC output.
- **Efficiency & Power Handling–** Designed for high efficiency and capable of handling large power levels with minimal losses.
- **Integration with ECU–** Communicates with the Hybrid Control Unit to optimize performance, switching between motor and generator modes.
- **Cooling Requirement–** Equipped with advanced cooling systems (air or liquid) to manage heat generated during high-power operation.

Component- DC/DC convertor

- **Voltage Conversion–** Steps down the high-voltage from the traction battery (200–400 V or more) to a lower voltage (typically 12 V or 48 V) for auxiliary systems like lights, infotainment, and control units.
- **Bidirectional Operation (in some HEVs)–** Can also step up voltage when needed, ensuring proper energy flow between low-voltage and high-voltage systems.
- **Battery Charging–** Charges the 12 V auxiliary batteries from the high-voltage traction battery.
- **Improved Efficiency–** Optimizes power distribution and minimizes energy losses within the vehicle.
- **Safety & Protection–** Provides electrical isolation, overvoltage/overcurrent protection, and stabilizes voltage levels for sensitive electronics.
- **Integration–** Works alongside the inverter and Battery Management System (BMS) to ensure smooth energy flow.

Component- Electrical Generator

Power Generation– Converts mechanical energy from the internal combustion engine (ICE) into electrical energy.

Battery Charging– Supplies power to recharge the high-voltage traction battery and sometimes the auxiliary 12 V battery.

Dual Role (Motor-Generator Unit)– In many HEVs, the generator can also act as a motor to assist propulsion when required.

Energy Recovery– Works with regenerative braking to capture kinetic energy and feed it back into the battery.

Stabilized Supply– Provides consistent electrical output for traction motor and vehicle electronics.

Integration with Hybrid Control Unit (HCU)– Controlled electronically to balance power sharing between engine, motor, and battery for maximum efficiency.

Component- Control Module

Central Controller (Hybrid Control Unit– HCU)– Acts as the brain of the HEV, coordinating the operation of the engine, motor, battery, inverter, and other components.

Power Flow Management– Decides when to use the electric motor, the engine, or both, depending on driving conditions (start, cruise, acceleration, braking).

Energy Optimization– Ensures maximum fuel efficiency and minimum emissions by smartly switching between power sources.

Battery & Motor Protection– Works with the Battery Management System (BMS) to prevent overcharging, overheating, and over-discharging.

Drive Mode Control– Manages different drive modes like EV mode, Hybrid mode, and Regenerative Braking.

Communication Hub– Interfaces with sensors, vehicle electronics, and driver inputs to deliver smooth and safe performance.

HYBRID ELECTRIC DRIVE TRAINS

The term hybrid vehicle refers to a vehicle with at least two sources of power

(i) one source of power is provided by an electric motor.

(ii) Second source, typically provided by an IC engine

Internal Combustion Hybrid Vehicle

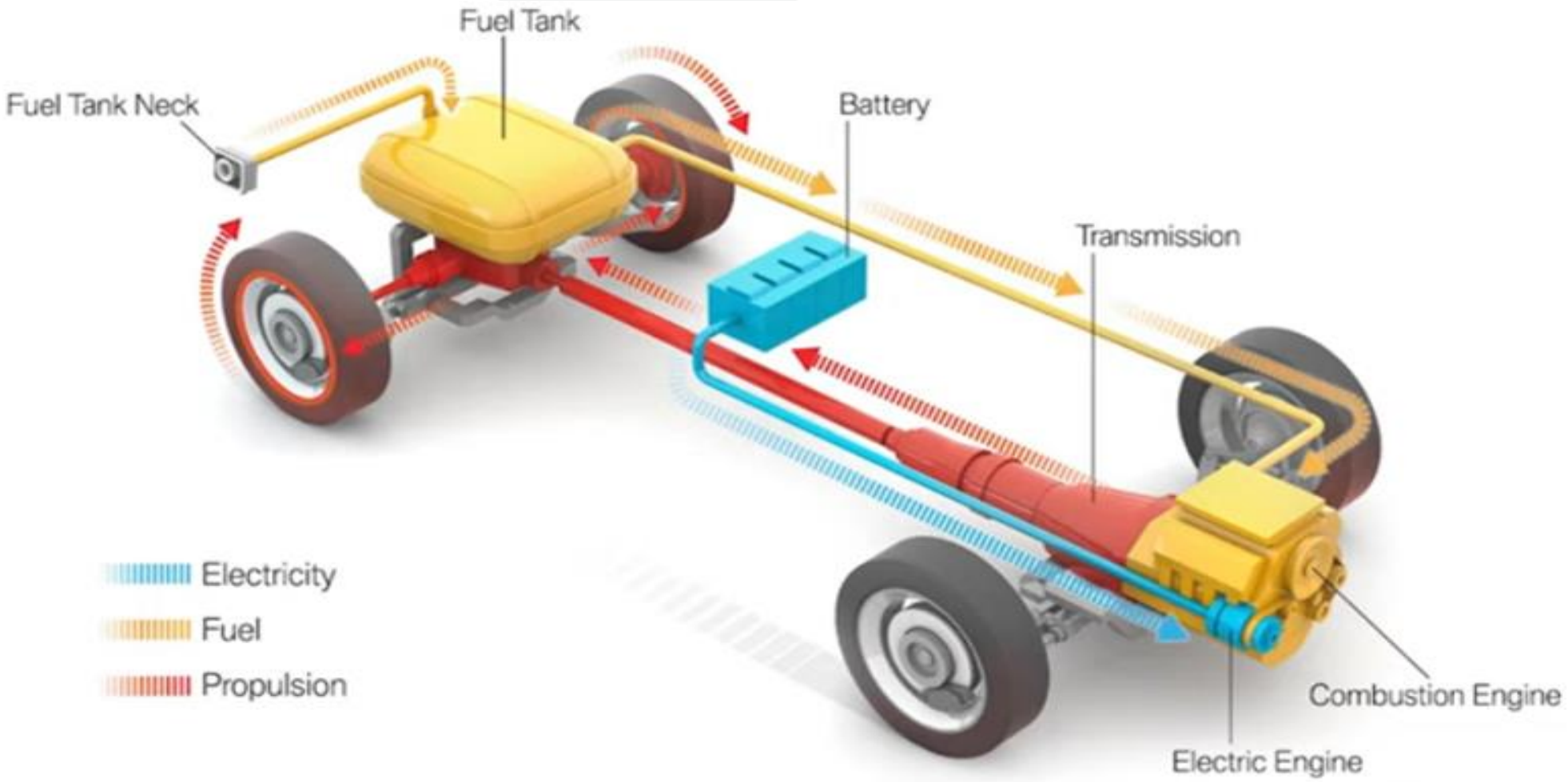

Hydrogen power cell vehicle

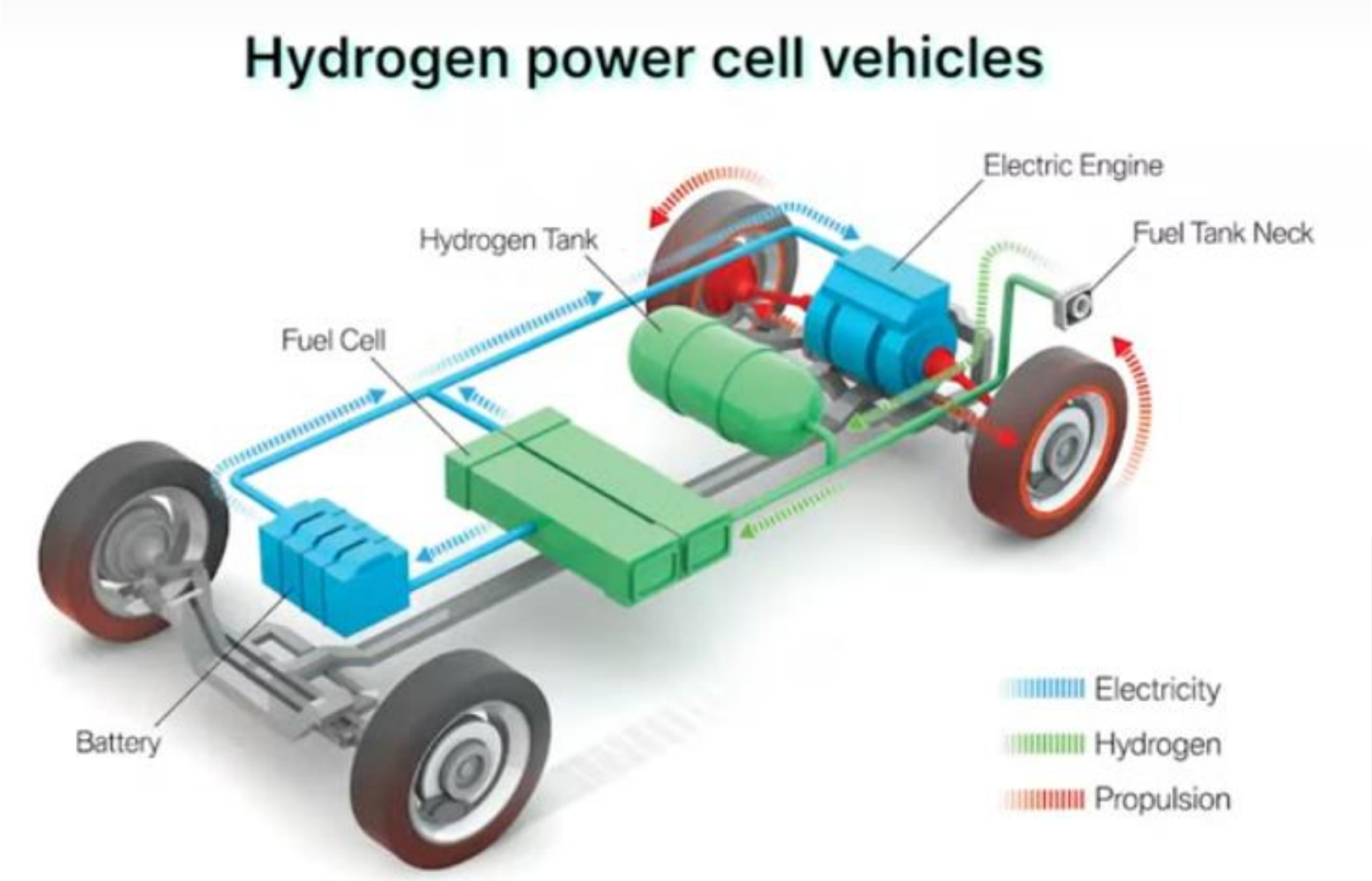

Types of HEV

Depending upon the **"Structure of Drivetrain"**

Hybrid vehicles are further classified as:

- Series Hybrid / Micro Hybrid
- Parallel Hybrid
- Series-Parallel Hybrid / Power Split Hybrid

Series Hybrid Vehicle

- Series hybrid is to couple the ICE with the generator to produce electricity for pure electric propulsion
- Mechanical output is first converted into electricity using a generator.
- Converted electricity either charges the battery or can bypass the battery to propel the wheels via the motor and mechanical transmission.
- Conceptually, it is an ICE assisted Electric Vehicle (EV).

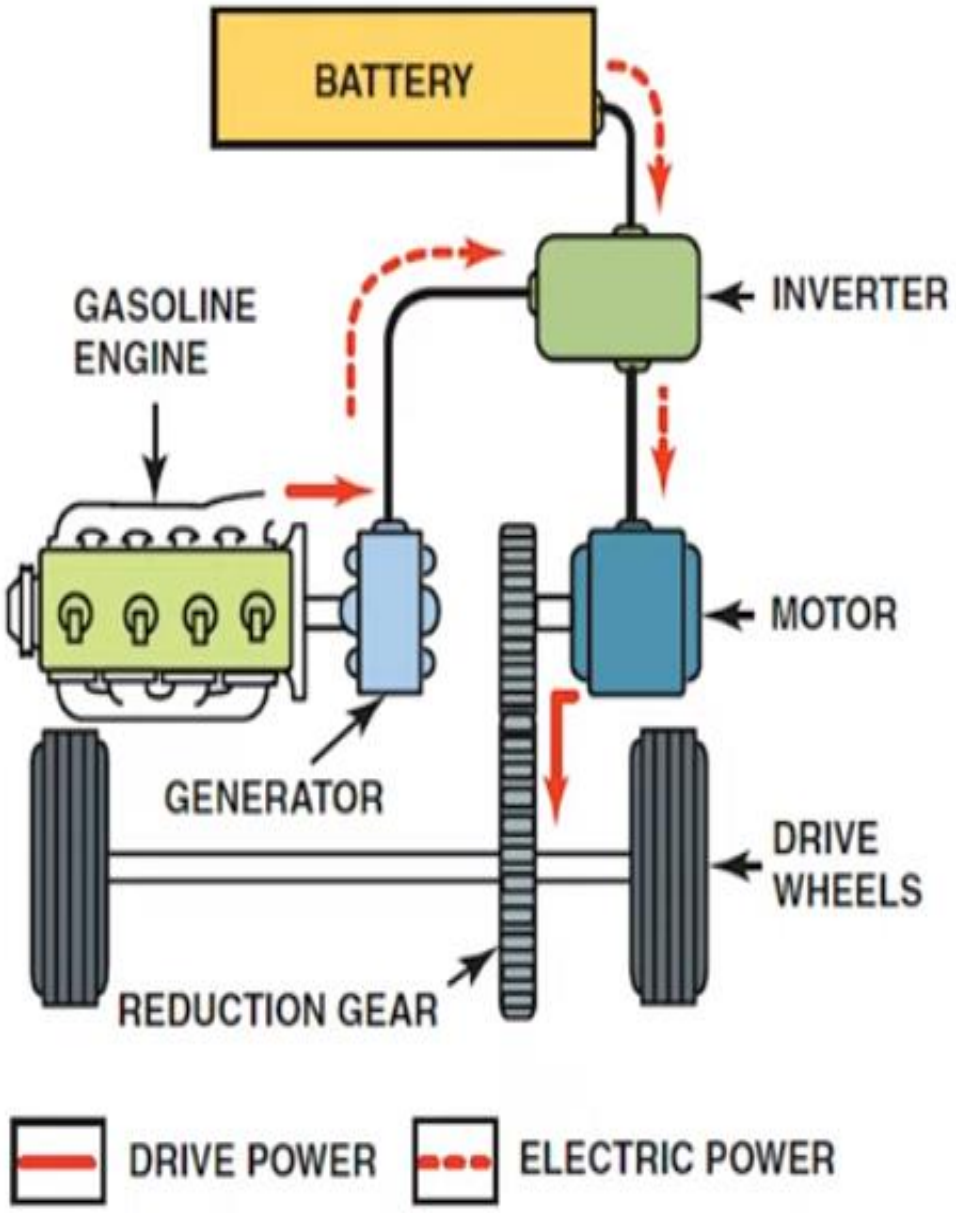

Series Hybrid Vehicle

- In this type of hybrid vehicle, wheels are powered only by an electric motor, which ultimately derives its power from the electric battery the IC engine installed in the vehicle does not supply power to the wheels directly. Instead, it drives a generator, which charges the battery and/or supplies power to the motor. Because of this, these vehicles require large-capacity batteries.
- It is more efficient in **low-speed** driving involving frequent **start-stop**
- The generator both charges a battery and powers an electric motor that moves the vehicle.
- When large amounts of power are required, the motor draws electricity from both the battery and the generator.
- Series hybrids may also be referred to as **Extended-Range Electric Vehicles (EREVs) or Range-Extended Electric Vehicles (REEVs)** since the gas engine only generates electricity to be used by the electric motor and never directly drives the wheels.

Series Hybrid Vehicle

ADVANTAGES

- No Transmission
- No clutch
- No torque converter
- Mechanical decoupling between the ICE and wheels allows IC engine operation at optimal
- Nearly ideal torque-speed characteristics of electric motor make multi-gear transmission unnecessary

Series Hybrid Vehicle

DIS-ADVANTAGES

- Energy is converted twice (mechanical to electrical and then to mechanical) and this reduces the overall efficiency
- Two electric machines are needed and a big motor is required because it is the only torque source of the driven wheels
- Completely dependent on battery power

Application: heavy commercial vehicles, military vehicles and buses.

Reason: large vehicles have space for the bulky engine/generator system

Parallel Hybrid Vehicle

- Allows both ICE and Electric Motor (EM) to deliver power to drive the wheels
- Since both the ICE and EM are coupled to the drive shaft of the wheels via two clutches, the propulsion power may be supplied by ICE alone, by EM only or by both ICE and EM
- EM can be used as a generator to charge the battery by regenerative braking or absorbing power from the ICE when its output is greater than that required to drive the wheels.

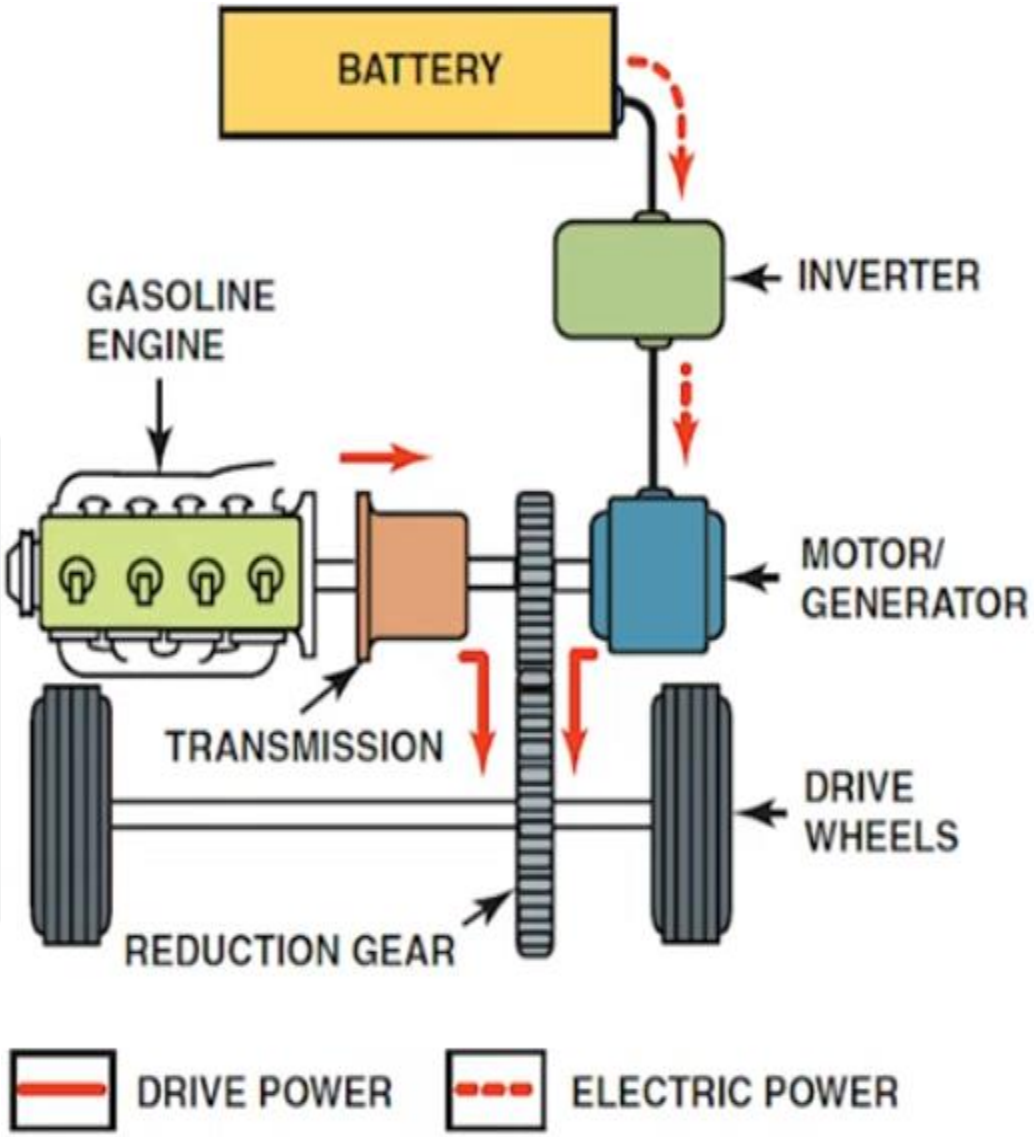

Parallel Hybrid Vehicle

- In this type of hybrid vehicle, wheels get power from both the IC engine and an Electric Motor.
- The drivetrain of these vehicles is so designed that it can receive power from both the IC engine and Battery simultaneously. However, the IC engine serves as the main source of power in the Parallel hybrid vehicle.
- As the electric battery's role is only to support the engine, these vehicles need a smaller capacity battery.
- A parallel hybrid is more effective in **high-speed driving.**
- There is no separate generator in a parallel hybrid. Whenever the generator's operation is needed, the motor functions as a generator.
- In a parallel mild hybrid, the vehicle can never drive in pure electric mode. The electric motor turns on only when a boost is needed.

Parallel Hybrid Vehicle

ADVANTAGES

- Both engine and electric motor directly supply torques to the driven wheels and no energy form conversion occurs

- Compactness due to no both energy sources work in tandem leading to significantly less weight

Parallel Hybrid Vehicle

DIS-ADVANTAGES

- Mechanical coupling between the engine and wheels, thus the engine operating points cannot be fixed in a narrow speed region

- Mechanical configuration and the control strategy are complex compared to series hybrid drive train as seamless blending of energy from dual sources resulting in complex software and hardwares

Application:

- Due to its compact characteristics, small vehicles use parallel configuration.
- Most passenger cars employ this configuration.

Series-Parallel Hybrid

- In the series-parallel hybrid (Figure), the configuration incorporates the features of both the series and parallel HEVs

- IC Engine is used to charge the battery as well as drive the wheels resulting in higher efficiency and performance.

- However, this configuration needs an additional electric machine and a planetary gear unit making the control complex.

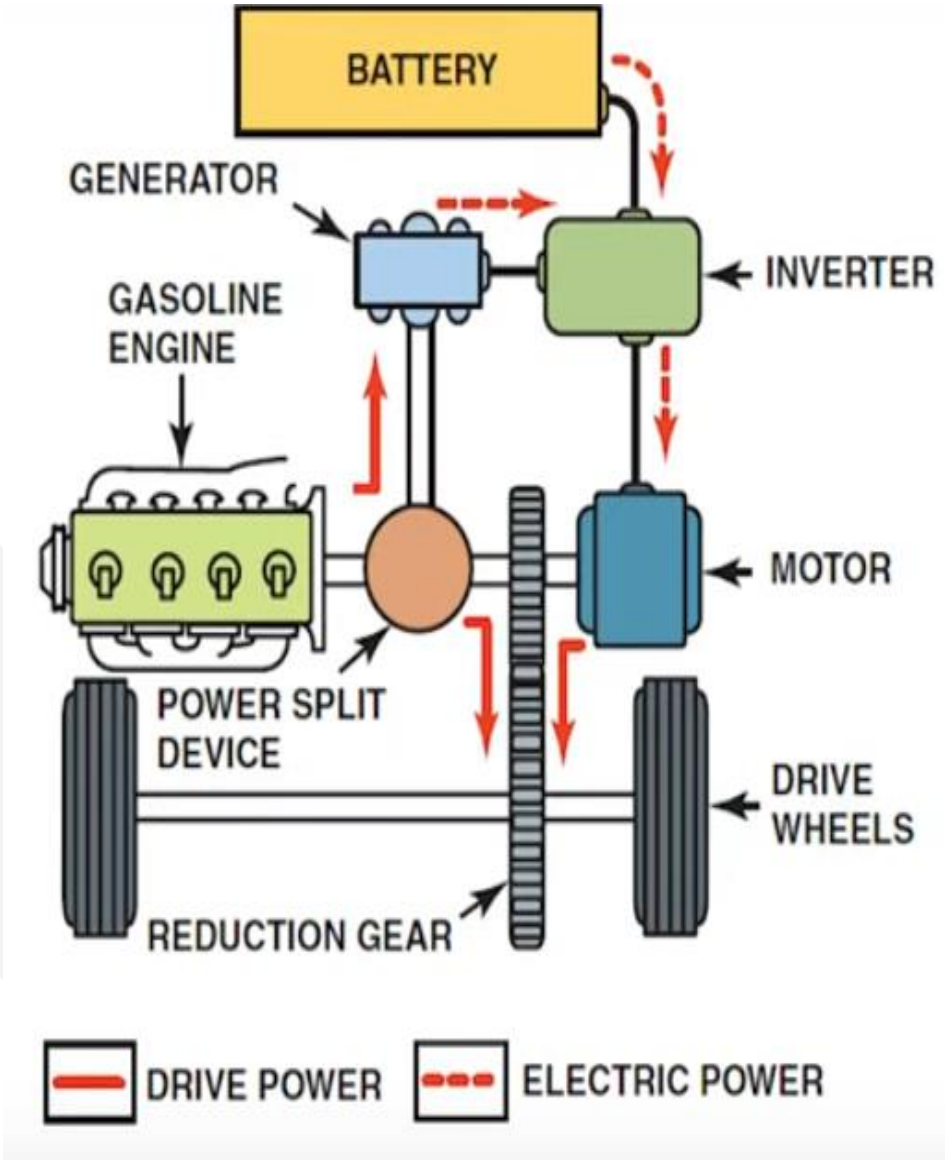

Series-Parallel Hybrid

- This recently developed system is a combination of a series hybrid system and a parallel hybrid system. Thus, it takes the best from both worlds.
- Depending upon the load on the vehicle, it can act like a parallel hybrid vehicle or a series hybrid vehicle. The control module governs the selection of the most suitable mode.

Types of hybrid

Based on the "Degree of Hybridization"

Hybrids are Classified into Two Groups:

1. Mild Hybrids / Micro Hybrids:

- These hybrids cannot run on electric battery alone. They always need the support of an IC engine to run, as the battery used in these vehicles is of a small capacity.
- They use a battery and electric motor to help power the vehicle and can allow the engine to shut off when the vehicle stops (such as at traffic lights or in stop-and-go traffic), further improving fuel economy.
- Mild hybrid systems cannot power the vehicle using electricity alone.
- These vehicles generally cost less than full hybrids but provide fewer fuel economy benefits than full hybrids.

Types of hybrid

2. Full Hybrids:

- This vehicle can run on either the IC engine or the electric battery alone as the battery used in them is of a higher capacity.

- Have larger batteries and more powerful electric motors, which can power the vehicle for short distances and at low speeds. These vehicles cost more than mild hybrids but provide better fuel economy benefits.

Regenerative Braking

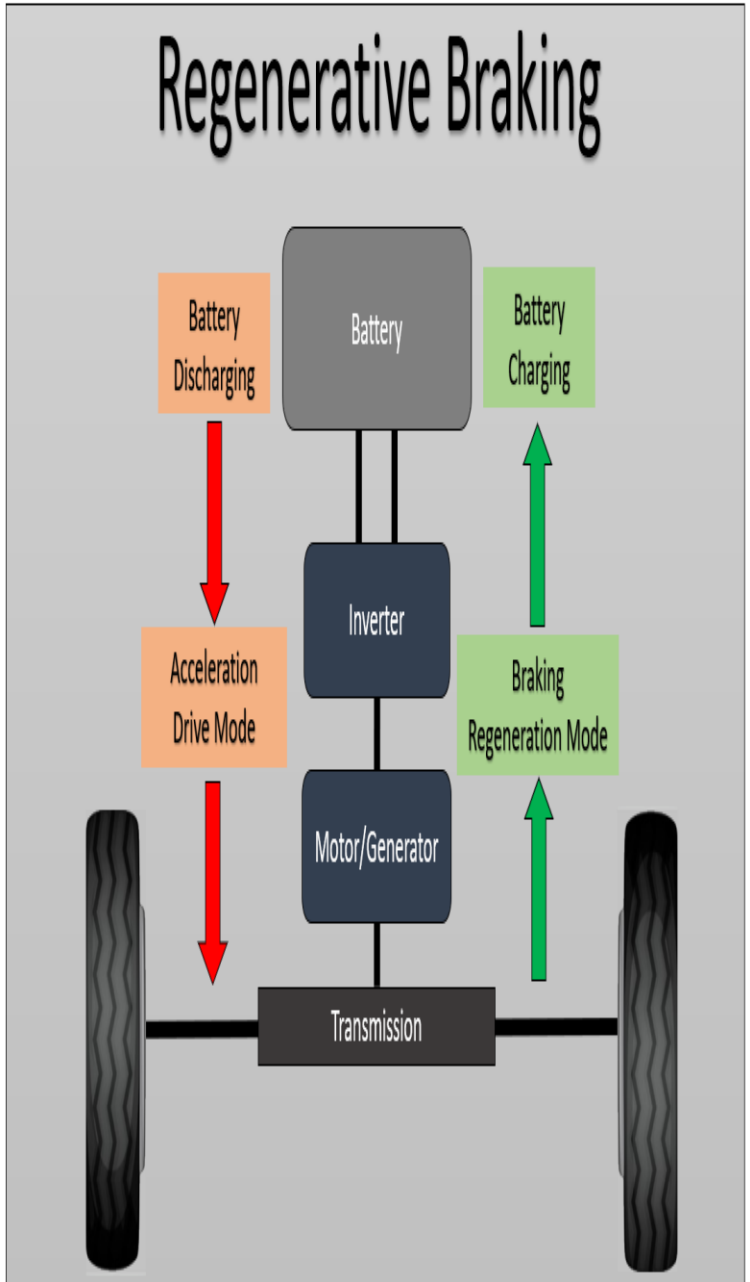

- Regenerative braking is the **recovery of Kinetic Energy (KE)** during braking
- HEV / EV can use the electric motor to **recover a portion of the KE**

Regenerative braking enables:

- **Extended range** in electric vehicles
- **Lower fuel consumption** and **Improve CO2 emissions** in hybrid vehicles

As the driver operates the brake pedal the **electric motor switches to generator mode** hence Wheels transfer the **kinetic energy through the drive train to the generator**

Through the rotary motion, generator converts a portion of the **KE to electric energy**

Generator braking torque **resulting in energy generation & decelerates the vehicle**

Regenerative Braking

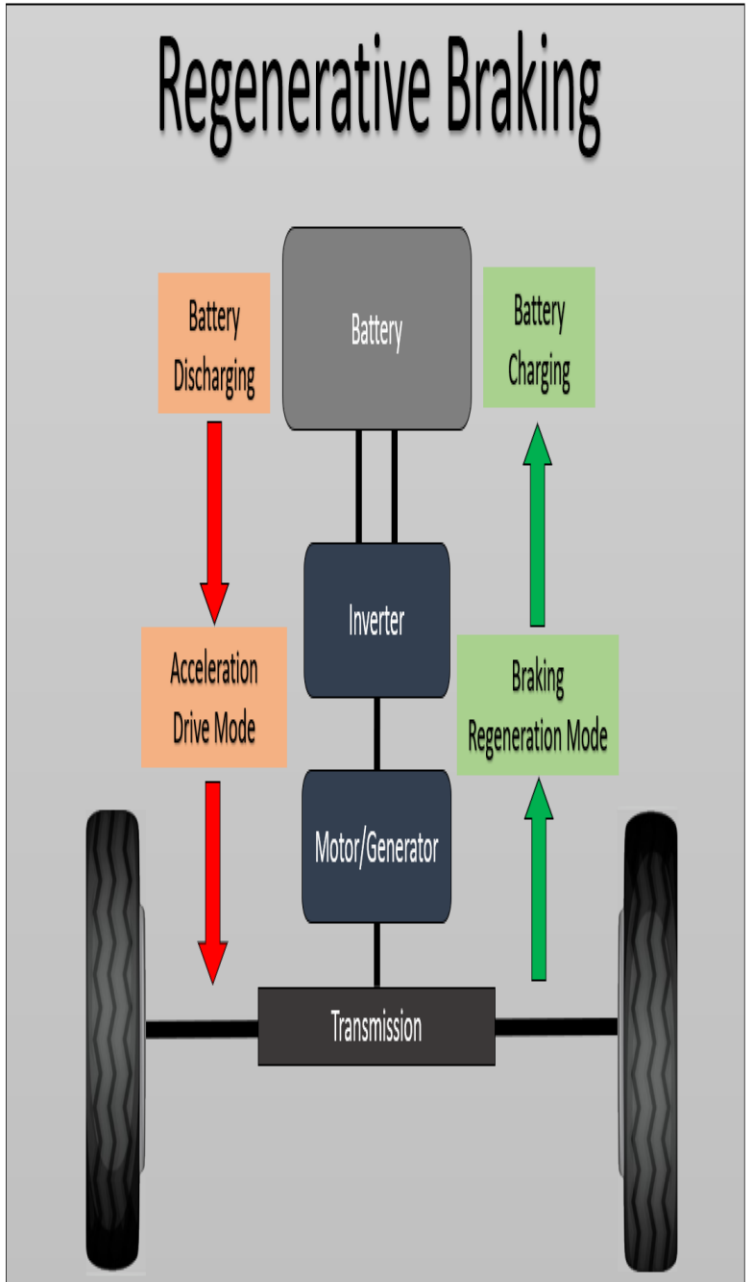

- At low speeds, **generator can no longer supply the braking torque**, friction brake is activated
- **Motor controller** enables the switching to **generator mode**
- The braking torque is continuously adopted by the friction braking to the current generative braking torque – **Process called TORQUE BLENDING**

Mechatronics

&

Robotics

Introduction:

- The term **"Mechatronics "** was coined in 1969 by a senior engineer of a Japanese Yasakawa Electric Company to refer to the use of electronics in mechanical control.
- Mechatronics is defined as the synergistic integration of mechanical engineering with electronics and intelligent computer control in the design and manufacturing of products and process

Domain of Mechatronics

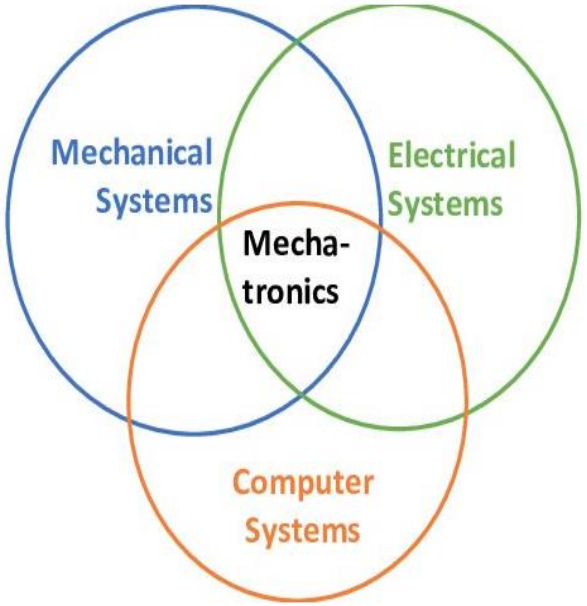

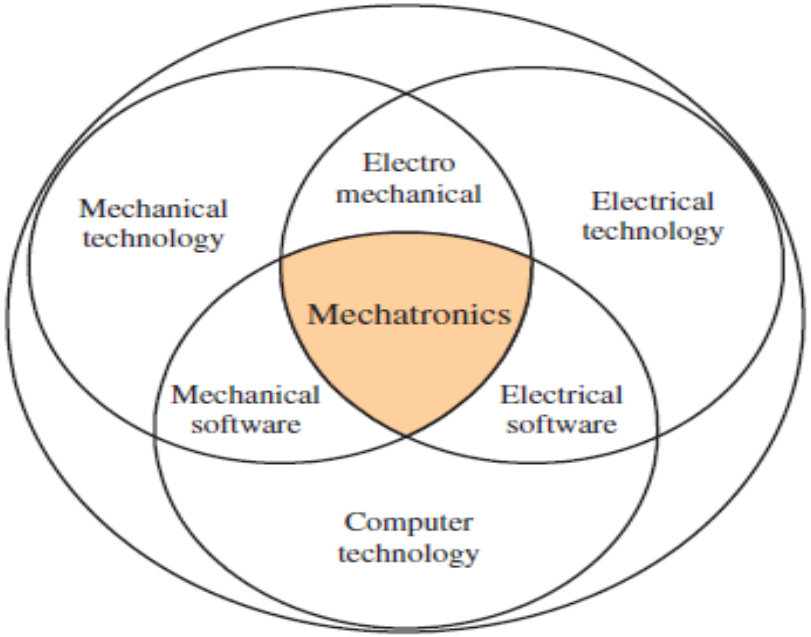

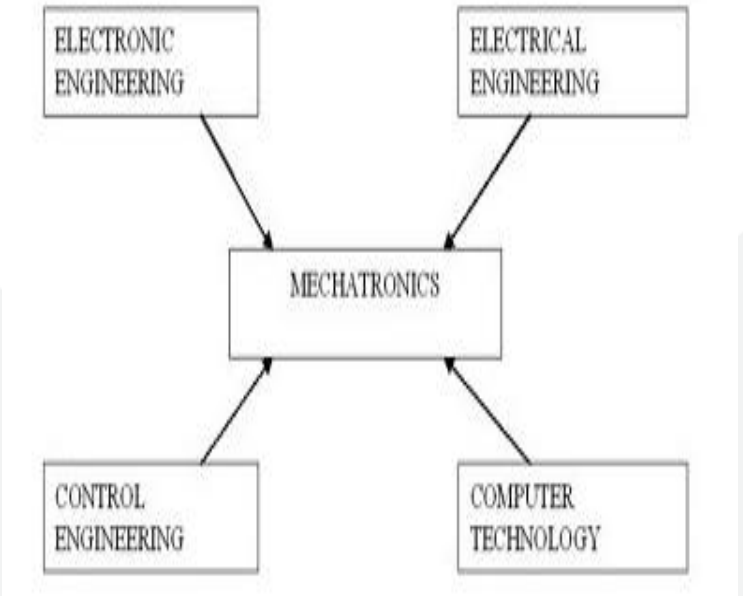

Key elements of Mechatronics systems

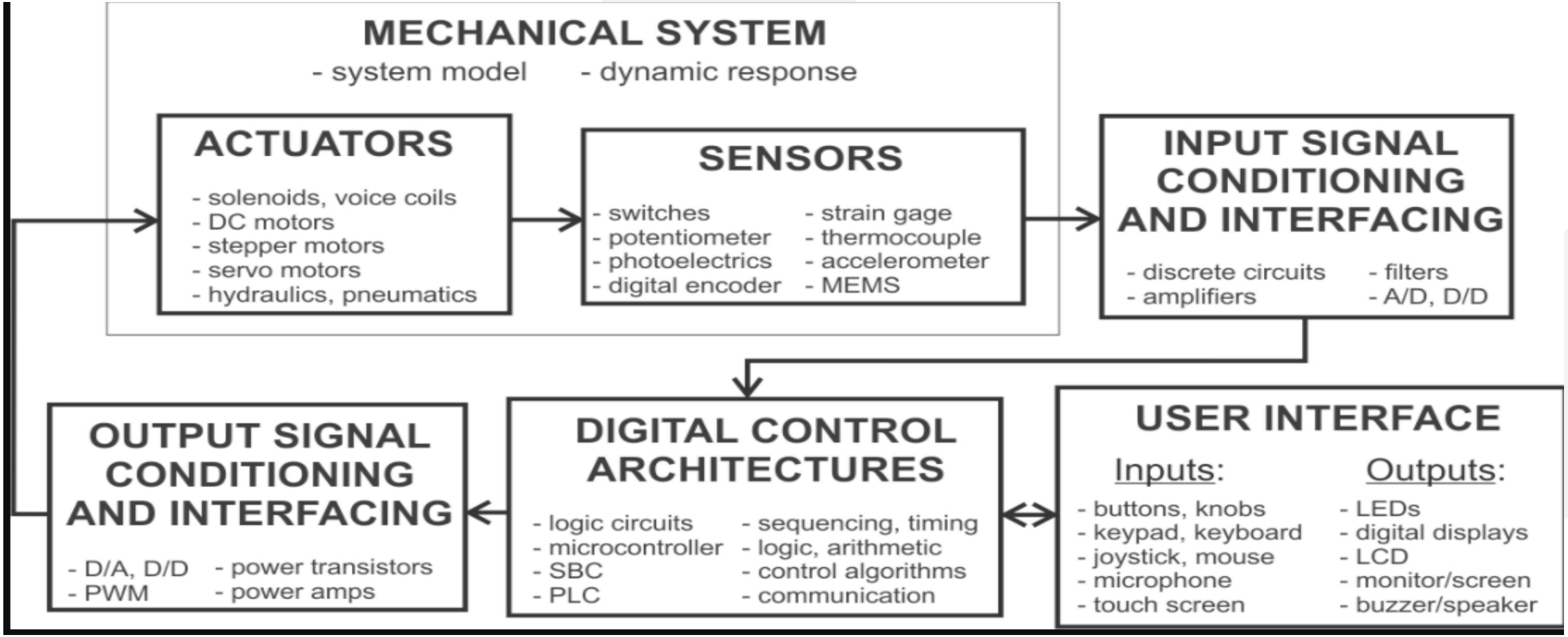

Mechatronics design process

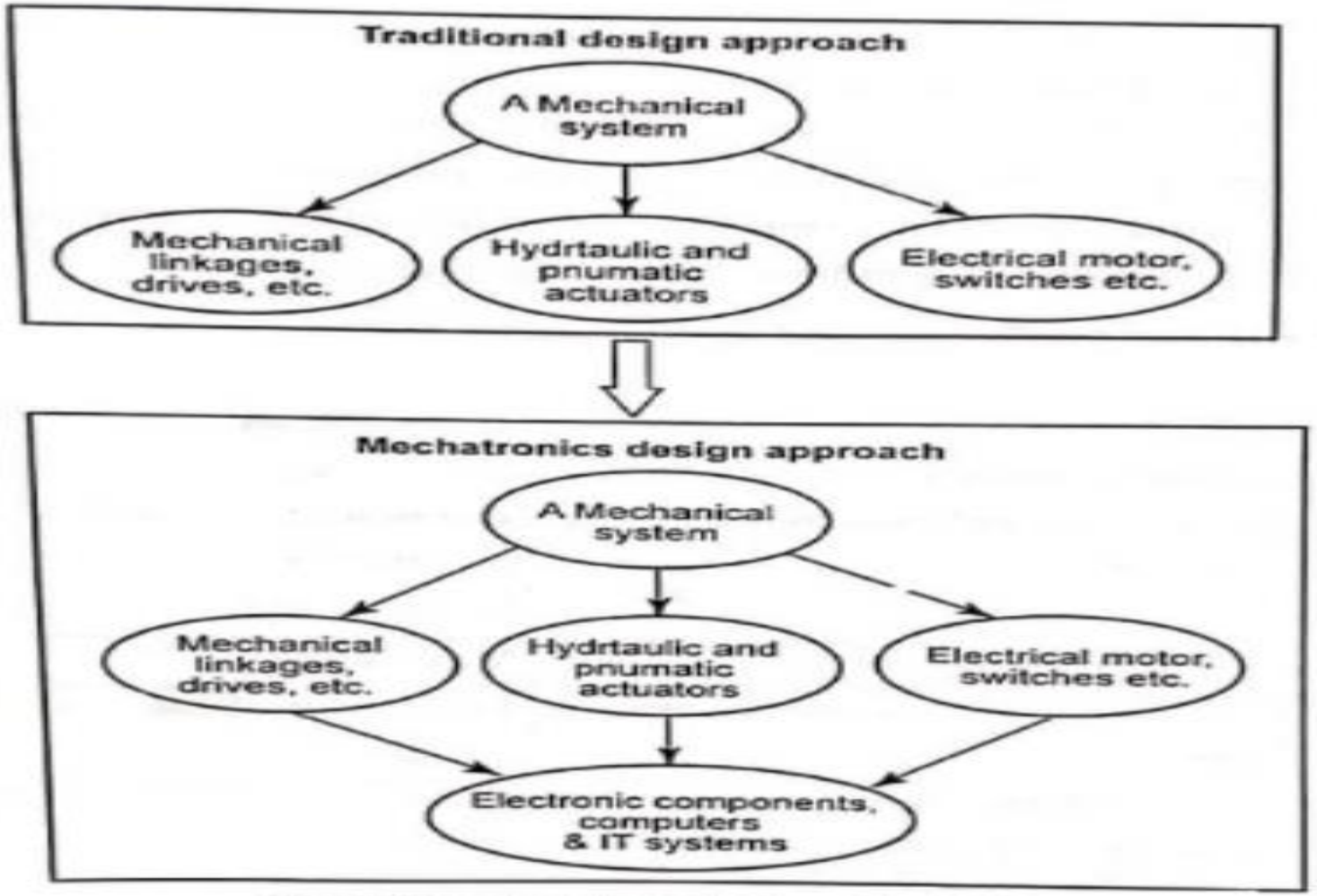

Traditional and mechatronics design approaches

Phase of Mechatronic system design process

- Modelling & Simulation
- Prototyping
- Deployment

Phase of Mechatronic system design process

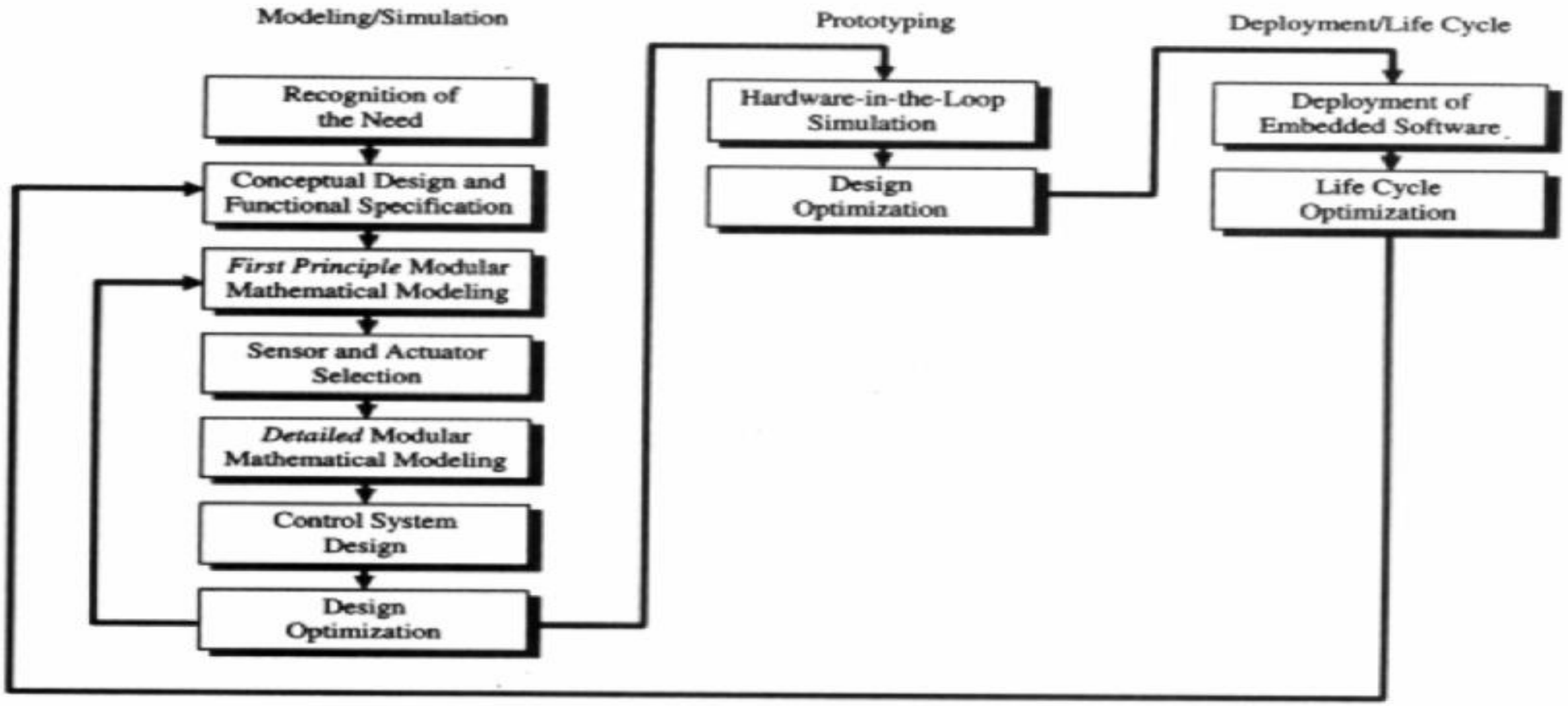

Phase of Mechatronic system design process

1. Modeling/Simulation Phase:

This is the initial and most critical phase where the system is conceptualized and virtually designed before creating any physical prototype. The steps include:

Recognition of the Need: Identifying the purpose or problem the mechatronic system is intended to solve.

Conceptual Design and Functional Specification: Defining the functional requirements and conceptual layout of the system.

First Principle Modular Mathematical Modelling: Creating mathematical models based on fundamental physics and engineering principles.

Sensor and Actuator Selection: Choosing suitable sensors and actuators that meet system requirements.

Detailed Modular Mathematical Modelling: Developing advanced and detailed mathematical models for accurate simulations.

Control System Design: Designing controllers to manage system dynamics effectively.

Design Optimization: Refining the design through simulations to achieve optimal performance.

2. Prototyping Phase

Once the design is validated through simulation, the next step is physical realization and testing.

Hardware-in-the-Loop (HIL) Simulation: A hybrid approach where real hardware components are integrated with simulation models to test system performance under near-real conditions.

Design Optimization: Refinement based on prototype testing, ensuring the design meets performance, safety, and cost criteria.

3. Deployment/Life Cycle Phase

This phase deals with implementing the system in real-world applications and ensuring its sustainability over time.

Deployment of Embedded Software: Installing the control algorithms and software into embedded systems (e.g., microcontrollers, PLCs).

Life Cycle Optimization: Monitoring, maintaining, and improving the system throughout its operational life. It involves performance feedback, upgrades, and adaptations.

Introduction to Sensors in Mechatronics:

A sensor is a device that detects physical parameters (temperature, pressure, speed, displacement, light, etc.) and converts them into an electrical signal that can be measured or processed.

Role in Mechatronics:

- Act as the "eyes and ears" of mechatronic systems.
- Bridge between physical systems and control systems.
- Provide data for controllers (microcontrollers, PLCs, ECUs).

Basic Working Principle:

1. Measure a physical parameter.
2. Convert it into an electrical signal.
3. Condition the signal (amplification, filtering).
4. Send it to a controller for decision-making.

Applications: Robotics, automation, automotive, aerospace, medical devices.

Classification of Sensors:

Based on Measurement Quantity:

- Mechanical Sensors – force, torque, displacement (strain gauge, LVDT).
- Thermal Sensors – temperature, heat flow (thermistor, thermocouple).
- Optical Sensors – light intensity, color, vision (photodiode, camera).
- Chemical Sensors – gas, humidity, pH sensors.

Based on Output Signal:

- Analog Sensors – produce continuous signals (e.g., thermocouple, strain gauge).
- Digital Sensors– produce discrete ON/OFF signals (e.g., proximity switch).

Based on Power Requirement:

- Active Sensors – require external power (e.g., piezoelectric sensor, photodiode).
- Passive Sensors – generate signals directly from stimulus (e.g., thermocouple).

Common Sensors in Mechatronics

1. Temperature Sensors

Examples: Thermistor, RTD, Thermocouple.
Working: Resistance/voltage changes with temperature.
Applications: Engine monitoring, climate control, robotics cooling systems.

2. Proximity Sensors

Types: Inductive (metal), Capacitive (non-metal), Ultrasonic, Infrared.
Working: Detects object presence without contact by measuring field disturbance or reflection.
Applications: Object detection in robotics, conveyor systems, automation safety.

3. Force / Pressure Sensors

Examples: Strain gauge (resistance changes under stress), Piezoelectric sensor.
Applications: Load measurement in robotic arms, hydraulic systems, industrial presses.

4. Speed / Position Sensors

Examples: Encoders, Tachometers, Hall-effect sensors.
Working: Measure rotational/linear position or speed via pulses.
Applications: Motor control in CNC machines, robotics actuators, automotive speedometers.

Importance of Sensors in Mechatronics

- **Enable Feedback Control:** Sensors provide real-time data, allowing controllers to adjust actions dynamically.
- **Improve Performance:** Increase accuracy, reliability, and efficiency in mechatronic systems.
- **Enhance Automation:** Enable self-adaptive machines in manufacturing, robotics, and vehicles.
- **Ensure Safety:** Detect abnormal conditions (overheating, overload, obstacles).
- **Future Relevance**: Essential for Industry 4.0, IoT-enabled machines, and smart robotics.

What is an Actuator?

An actuator is a device that converts energy (electrical, hydraulic, or pneumatic) into mechanical motion.

It is essentially the "**muscle**" of a system, responsible for moving or controlling a mechanism.

Works together with sensors and controllers to form a complete mechatronic system.

Types of Motion Produced

1. Linear Motion → e.g., hydraulic cylinder, pneumatic cylinder.
2. Rotary Motion → e.g., electric motor, rotary vane actuator.

Types of Actuators

1. Electrical Actuators

Examples: DC motors, stepper motors, servo motors, solenoids.

Advantages: Precise control, easy integration with electronics.

Common in robotics, CNC machines, drones.

2. Hydraulic Actuators

Use pressurized fluid for movement.

Examples: Hydraulic cylinders, hydraulic motors.

Advantages: Very high force, suitable for heavy machinery (e.g., excavators, presses).

3. Pneumatic Actuators

Use compressed air for motion.

Examples: Pneumatic cylinders, air motors.

Advantages: Fast, clean, cheaper than hydraulics, widely used in automation and packaging industries.

Key Characteristics of Actuators

- Power source (electricity, air, oil).
- Speed (how fast it moves).
- Force/Torque(strength of movement).
- Accuracy & Precision (important in robotics and CNC).
- Control method (open loop or closed loop).

Applications

- Robotics (motors for movement).
- Industrial automation (hydraulic and pneumatic systems).
- Automotive (brake actuators, throttle control).
- Aerospace (flight control actuators).
- Consumer devices (disk drives, printers, cameras).

CONTROL SYSTEM

A control system can be thought of as a system which for some particular input or inputs is used to control its output to some particular value, give a particular sequence of events or give an event if certain conditions are met.

Example:
Central heating system
Domestic washing machine
Safety lock system

Two basic forms of control systems are **open loop and closed loop**

Open Loop Control System

An open loop control system is a type of control system where the output has no influence or feedback on the control action of the input. In other words, it does not correct errors automatically.

Features

- Control action is independent of the output.
- Works on predefined instructions.
- Simple, economical, and easy to design.
- Less accurate compared to closed-loop systems.

Examples

1. Electric washing machine (runs for a set time regardless of cleanliness).
2. Microwave oven (heats for fixed time, without sensing food temperature).
3. Automatic toaster (toasts bread for preset time).

Elements of open loop system

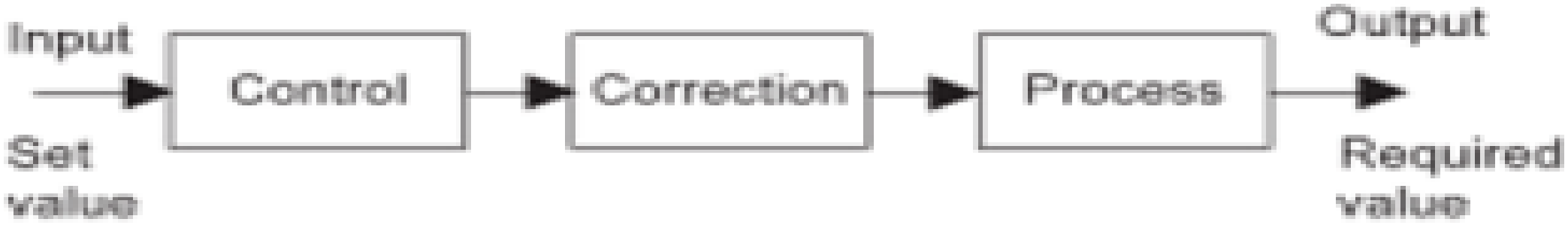

1. Control Element

The device that accepts the input signal (command) and decides the action.

Example: Timer in a washing machine, thermostat switch in an oven.

2. Correction Element (Actuator)

Converts the control signal into action (mechanical, electrical, or thermal energy).

Example: Motor, heater, valve.

3. Process (Plant)

The actual system where the operation takes place to get the desired output.

Example: Clothes being washed, room being heated, water being pumped.

Elements of closed loop system

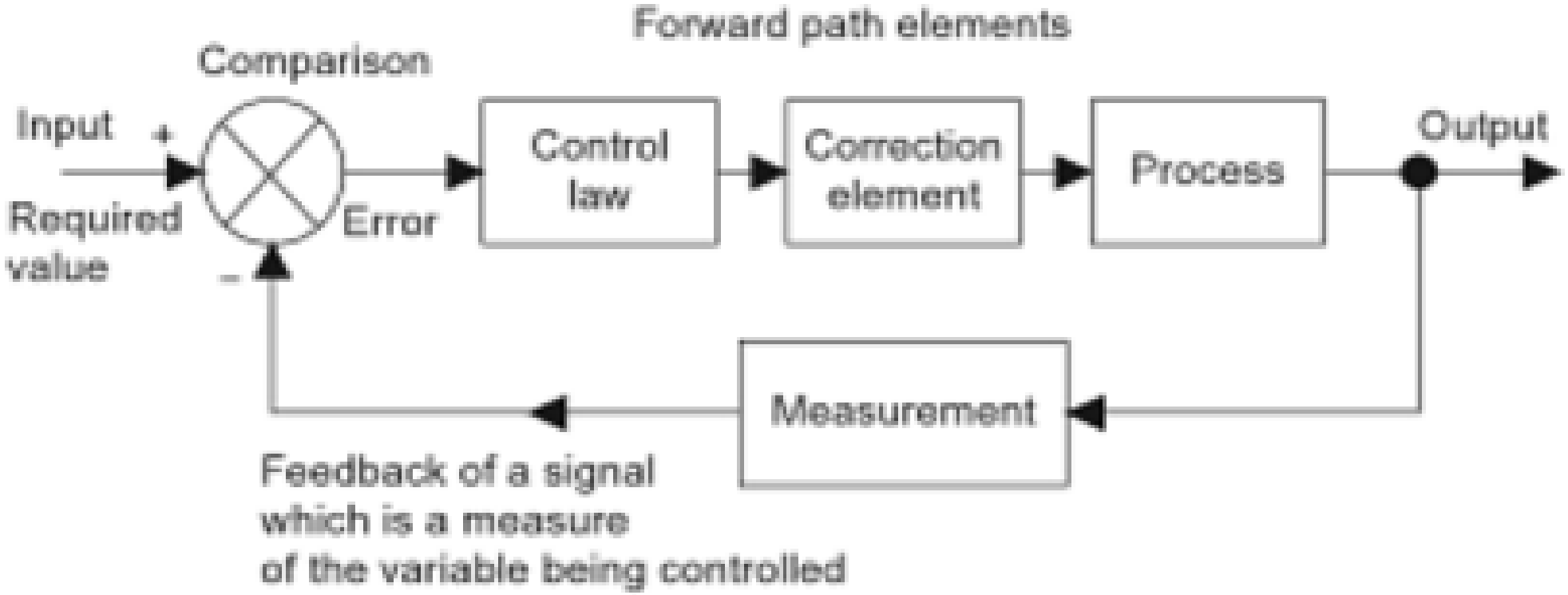

Elements of closed loop system

1. Input / Required Value (Setpoint): This is the desired output value we want the system to achieve (e.g., desired speed of a motor, room temperature, etc.).

2. Comparison (Error Detection): The actual output is fed back and compared with the input. The difference between the required value and the actual output is called the error signal.

3. Control Law (Controller):

- The error signal is processed by the controller.
- Examples: PID controller, electronic circuit, computer algorithm.
- It decides how to correct the system to reduce error.

4. Correction Element (Actuator):

- Implements the controller's decision.
- Converts electrical control signals into physical action (e.g., motor drive, valve movement).

5. Process (Plant/System):

- The actual system being controlled (motor, heater, robot arm, etc.).
- Takes corrective action to produce the output.

6. Output: The actual result produced by the system (e.g., motor speed, temperature, position).

7. Measurement (Feedback Sensor):

- The output is measured using sensors (e.g., speed sensor, temperature sensor).
- This feedback is sent back to the comparator to continuously adjust the system.

Anti-Lock Braking System (ABS)

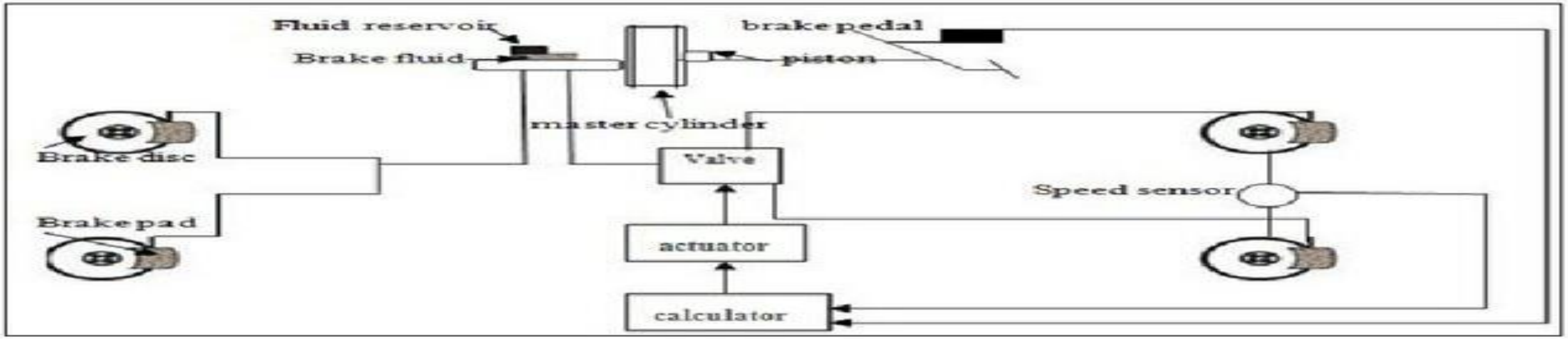

Working of Anti-Lock Braking System (ABS)

The purpose of ABS is to prevent wheel lock-up during sudden braking and to maintain steering control of the vehicle.

Driver Input (Brake Pedal Pressed):

- When the driver presses the brake pedal, force is transmitted to the master cylinder, which pushes brake fluid into the brake lines.
- The brake fluid applies pressure to the brake calipers (on the brake discs and pads).

Wheel Speed Sensing:

- Speed sensors are mounted on each wheel.
- They continuously monitor the rotational speed of the wheels.
- If the sensor detects a sudden drop in wheel speed (indicating possible lock-up), it sends a signal to the Electronic Control Unit (ECU / Calculator in diagram).

Anti-Lock Braking System (ABS)

Electronic Control Unit (Calculator):

- The ECU receives input from all wheel speed sensors.
- It determines if any wheel is about to lock (sudden sharp deceleration or stopping of rotation).

Actuator & Valve Operation:

- Based on ECU instructions, the actuator operates the valves in the brake line.

These valves can:

- Release brake pressure (if wheel is about to lock)
- Hold pressure (if braking force is correct)
- Reapply pressure (to continue braking without locking)

Brake Disc and Pad Control:

- This cycle of apply → release → reapply happens many times per second (up to 15–20 times).
- The result is controlled braking where wheels keep rotating slightly instead of skidding.

Anti-Lock Braking System (ABS)

Advantages of ABS

- Prevents skidding and wheel lock-up.
- Maintains vehicle stability and steering control during braking.
- Reduces stopping distance on slippery surfaces.
- Increases safety during emergency braking.

Engine Management System (EMS)

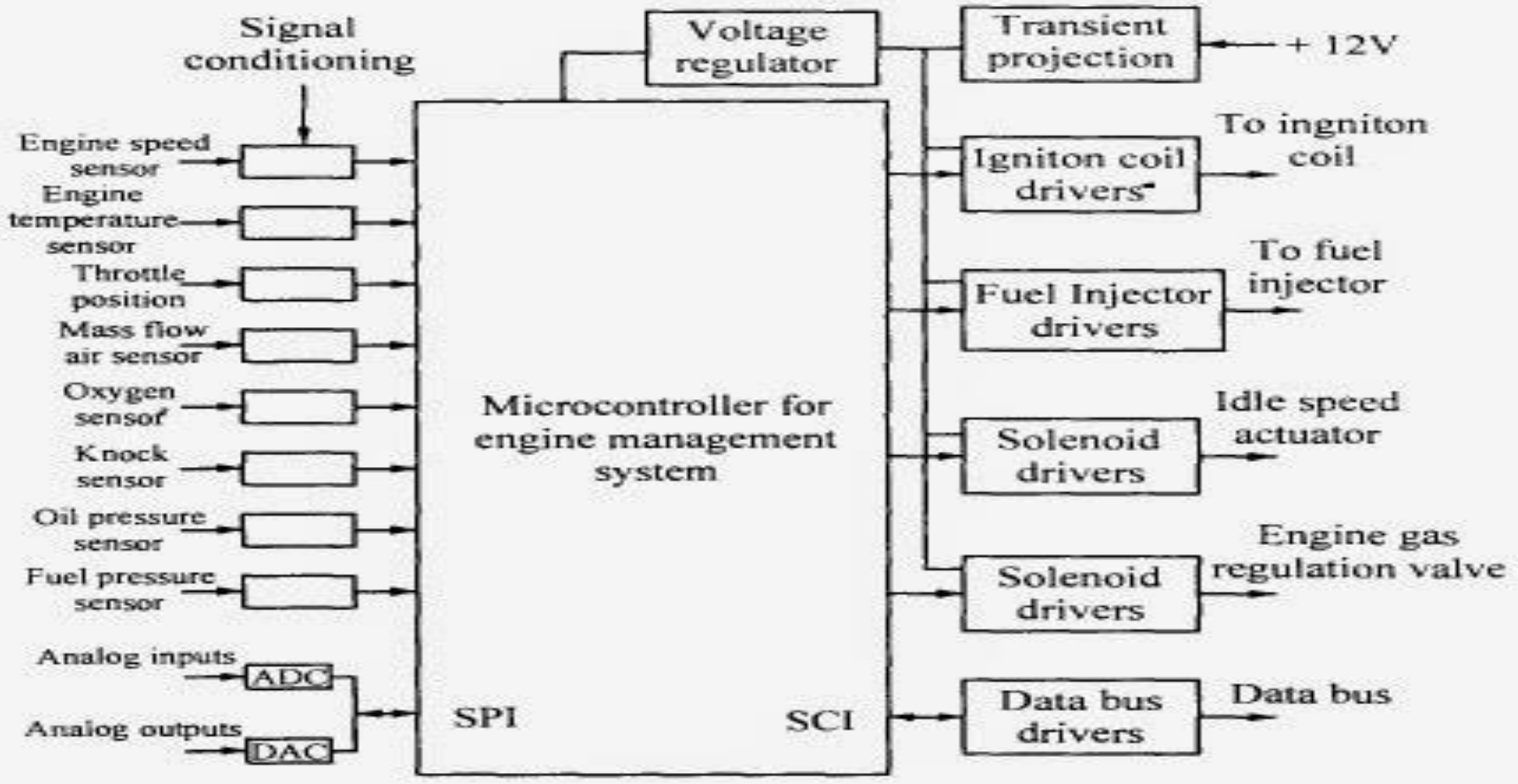

Block diagram of engine management system

Engine Management System (EMS)

The EMS is an electronic control system that ensures optimal performance of an engine by monitoring inputs from sensors and controlling actuators accordingly.

Input Section – Sensors

Various sensors provide real-time data about engine conditions:

- Engine Speed Sensor – Monitors crankshaft speed (RPM).
- Engine Temperature Sensor – Measures coolant temperature to adjust fuel-air mixture.
- Throttle Position Sensor (TPS) – Detects accelerator pedal/ throttle valve position.
- Mass Air Flow Sensor (MAF) – Measures the amount of air entering the engine.
- Oxygen Sensor (O2 Sensor) – Monitors oxygen level in exhaust gases to adjust air-fuel ratio.
- Knock Sensor – Detects engine knocking (abnormal combustion).
- Oil Pressure Sensor – Monitors engine lubrication status.
- Fuel Pressure Sensor – Ensures correct fuel supply to injectors.
- Analog Inputs/Outputs– Handle other signals (via ADC/DAC).

Engine Management System (EMS)

Central Processing – Microcontroller (ECU/EMS)

- The microcontroller is the brain of the system.
- It processes sensor signals, performs real-time calculations, and decides the required control actions.
- Uses communication protocols like SPI (Serial Peripheral Interface) and SCI (Serial Communication Interface).

Output Section – Actuators/Drivers

The microcontroller sends control signals to different drivers that control actuators:

Ignition Coil Drivers → To ignition coil → Controls spark timing.

Fuel Injector Drivers → To fuel injector → Controls amount & timing of fuel injection.

Engine Management System (EMS)

- Solenoid Drivers → Control actuators like:
- Idle Speed Actuator → Maintains engine idle speed.
- Engine Gas Regulation Valve → Controls exhaust gas recirculation (EGR) for emission control.
- Data Bus Drivers → Communicates with other vehicle systems (CAN bus).

Power Supply Section

- Voltage Regulator provides stable voltage to electronics.
- Transient Protection protects from spikes in the vehicle's +12V supply.

Robotic system

ROBOT:

The word robot was first coined by Czech novelist KAREL CAPEK in 1920's. The word robot means a servant or a worker. However, this was just a word coined but the actual technological development in the field of robot was first noted in the year 1957 by English inventor CYRIL WALTER KENWARD developed a manipulator that could move in x-y-z axes system.

The Robot Institute of America in 1979 defined a Robot as follows:

A Robot is a reprogrammable, multifunctional manipulator designed to move material, parts, tools or specialized devices through variable programmed motions of performance of a variety of tasks.

or

A robot that is used to perform tasks in industries is called an **industrial robot**. An industrial robot can perform a wide range of industrial tasks like loading, unloading, welding, painting, inspection, assembly, material transfer, etc.

Robotic System

why a Robot is required when a human can perform the tasks?

That is because of the following qualities:

- Robots can work in hazardous or dangerous environments such as a nuclear reactor, behind enemy lines, outside earth's atmosphere, etc. They can substitute humans in such environment.
- Robots can consistently work as per the program with great repeatability and accuracy that is unmatched by the humans.
- At the end of a task, robots can be reprogrammed to take up different tasks altogether.
- Robot parts can be replaced when damaged.
- In industries, Computer Integrated Manufacturing can be realized by connecting robots to computer systems and carrying out the different tasks.

Robotic System

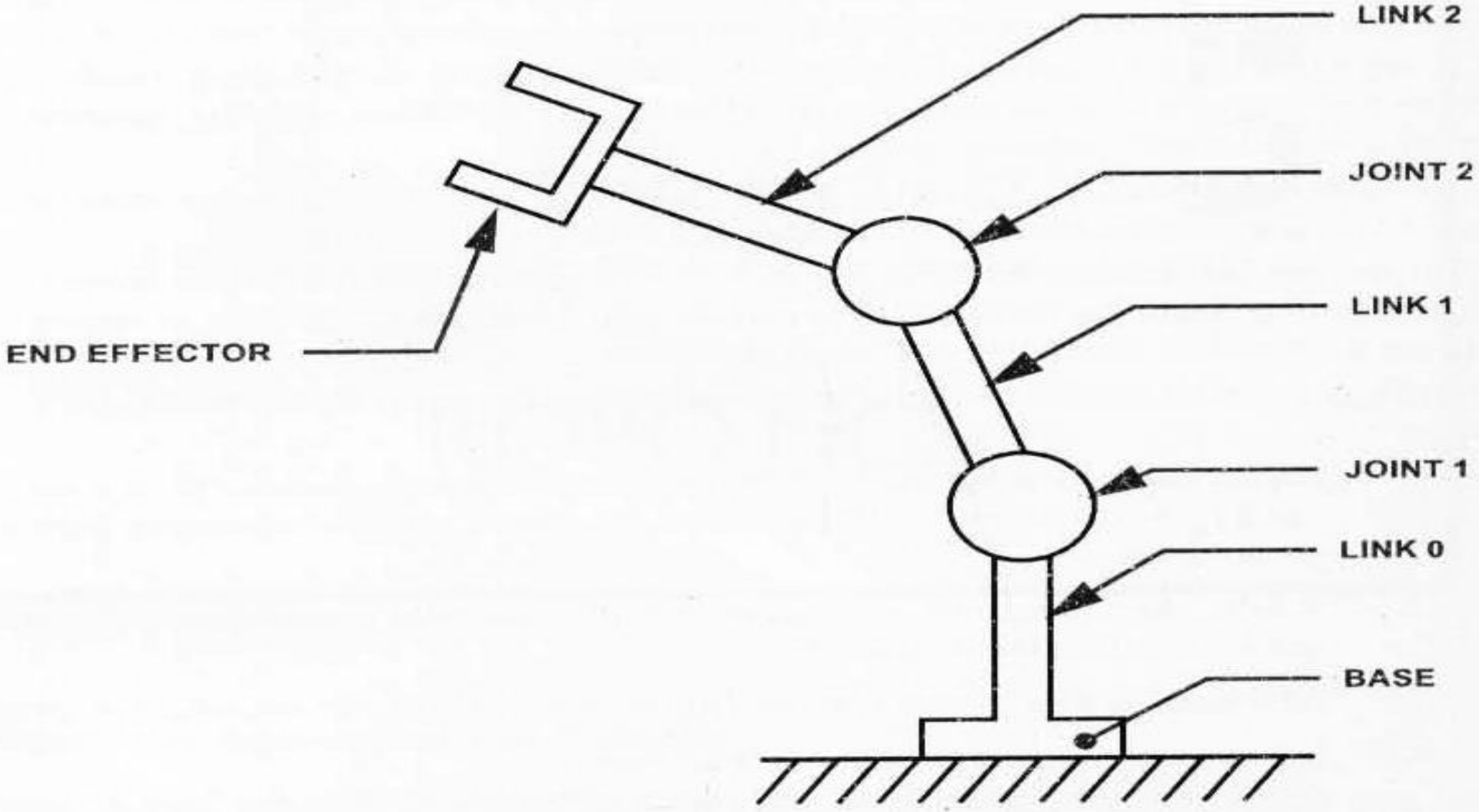

Basic terms related to Industrial Robots

In the study of Robotics, few basic terms are used quite often and their meanings are quite important.

The terms used in relation to Industrial Robots are as below:

- **Manipulator:** Manipulator is an arm-like mechanism which is designed to manipulate or move materials, parts, or tools without direct human contact.
- **Joint:** A joint is the one that integrates two or more links to provide controlled relative movement between input link and the output link.
- **Link:** The link is a rigid member that connects the joints. Link can be an input link and an output link. The movement of the input link causes various motions of the output link.
- **Degrees of freedom (d.o.f):** The degrees of freedom describe a robot's freedom of motion in the three-dimensional space.
- **End effector:** End effector or end-of-arm tool is the device at the end of the robotic arm which is shaped like a hand or as a special tool depending upon the application.

Elements of a Robotic System

A Robotic system has the following basic elements:

The Robot: This consists of:

a. Manipulator – Includes the base and the arm assembly.

b. End-of-the-arm tooling – The end-effector.

c. Actuators – Convert stored energy into movement. Common actuators include electric motors and linear actuators.

d. Transmission elements – Such as ball screws, pulleys, belts, gears, etc.

Control System: The control system generates the required signals to coordinate and execute the robot movements. The Control System comprises of:

Controls – Such as mechanical control, hydraulic control, pneumatic control, electrical or electronic control.

The control techniques can be:

- Open-loop (non-servo) control
- Feedback control
- Feed forward control
- Adaptive control

Elements of a Robotic System

- **Sensors:** Sensors allow robots to collect information about a certain measurement of the environment or internal components. The sensors can be touch sensors or vision sensors.

Equipment Interfaces

- **Computer System:** The computer system is used to program the robots according to the tasks required to be performed. The necessary software must be installed in the computer to develop robot programs.
- **Power Source:** Power source supplies electrical energy for the robot. The commonly used power source is the battery which can be a lead-acid battery or a silver-cadmium battery.

Robot configuration

Classification of Robot based on Robot configuration:

- Polar configuration
- Cylindrical configuration
- Cartesian configuration
- Joint arm configuration

Polar configuration Robot

The polar configuration robots, also called spherical configuration robots, consist of a sliding arm (L-joint) that is actuated relative to the body and a rotational base along with a pivot, which can rotate about a horizontal axis (R joint) and the vertical axis (T joint).

The one linear and the two rotary joints create a spherical work volume in which the robot operates.

Example: The Unimate 2000 series robot.

Advantage: Long reach capability is realized in the horizontal position.

Disadvantage: The vertical reach is low.

Applications: Die casting, forging, injection moulding, dip coating, cleaning of parts, etc.

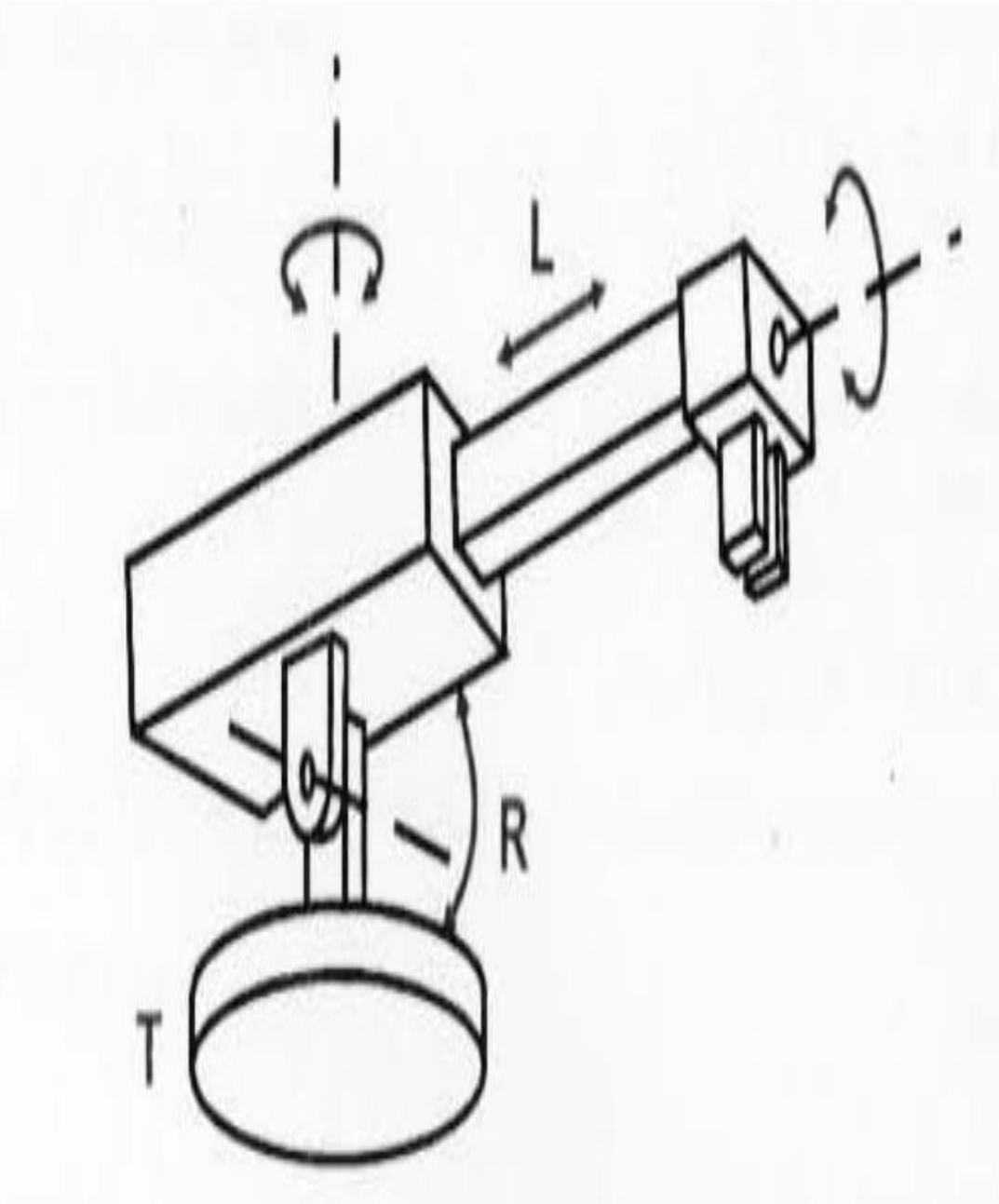

Cylindrical Configuration Robot

Robots of the cylindrical configuration consist of a slide in the horizontal position and a column in the vertical position. The arm assembly moves up or down relative to the column using an L-joint. The column is rotated about its axis using the T-joint. The radial movement of the arm is achieved using the O-joint as shown in Fig.

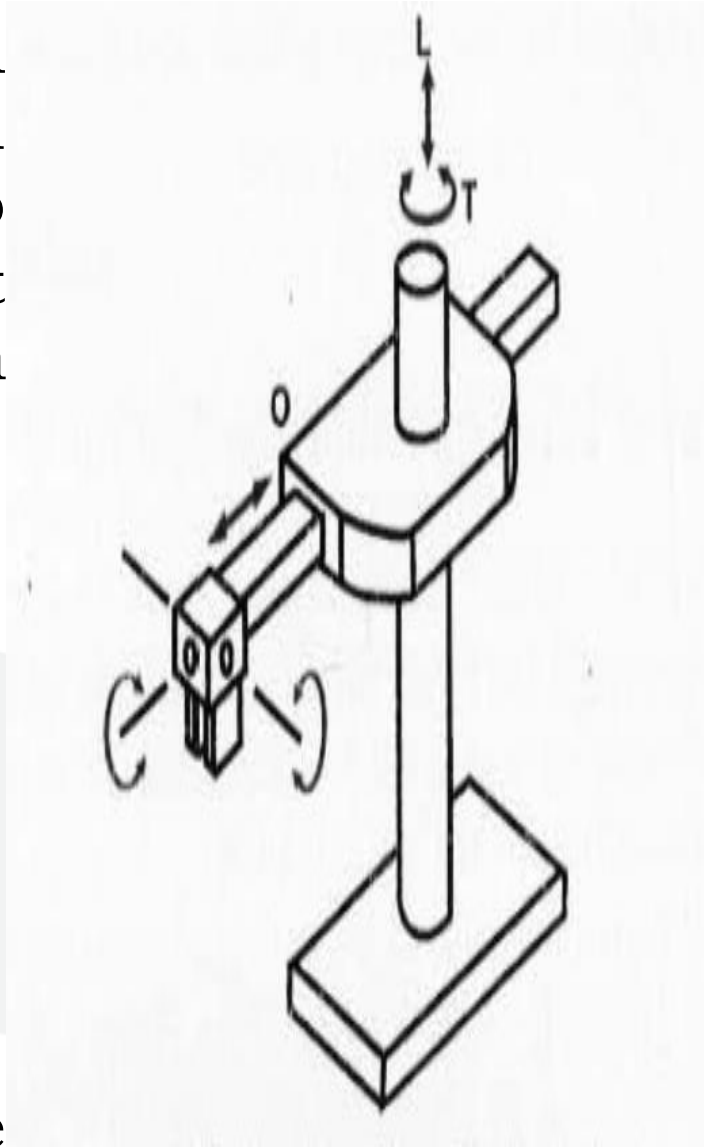

Example: Model 1A Robot of GMF Robotics Corp.

Advantages:

1. Rigidity is increased and is quite robust.
2. Has the capacity to carry high payloads.

Disadvantages:

1. Work volume is less.
2. Occupies more floor space.

Applications: Foundry and forging applications, investment casting, conveyor pallet transfers, machine loading and unloading.

Cartesian Co-ordinate configuration Robot

It is also called a Rectilinear Robot or XYZ Robot. It consists of three sliding joints along the X, Y, and Z directions in 3D space. There are two orthogonal joints. Since movement can stop and start simultaneously along the X, Y, and Z axes, the motion of the tool tip is smoother.

Advantages:

- Allows for simpler controls.
- Possesses a high degree of mechanical rigidity, accuracy, and repeatability.
- They can carry heavy loads and the weight lifting capacity does not vary within the work envelope.

Disadvantages:

- Limited in their movement to a small and rectangular workspace.
- Reduced flexibility.

Applications:

- To perform pick and place tasks, material handling, loading/unloading, and machining operations.

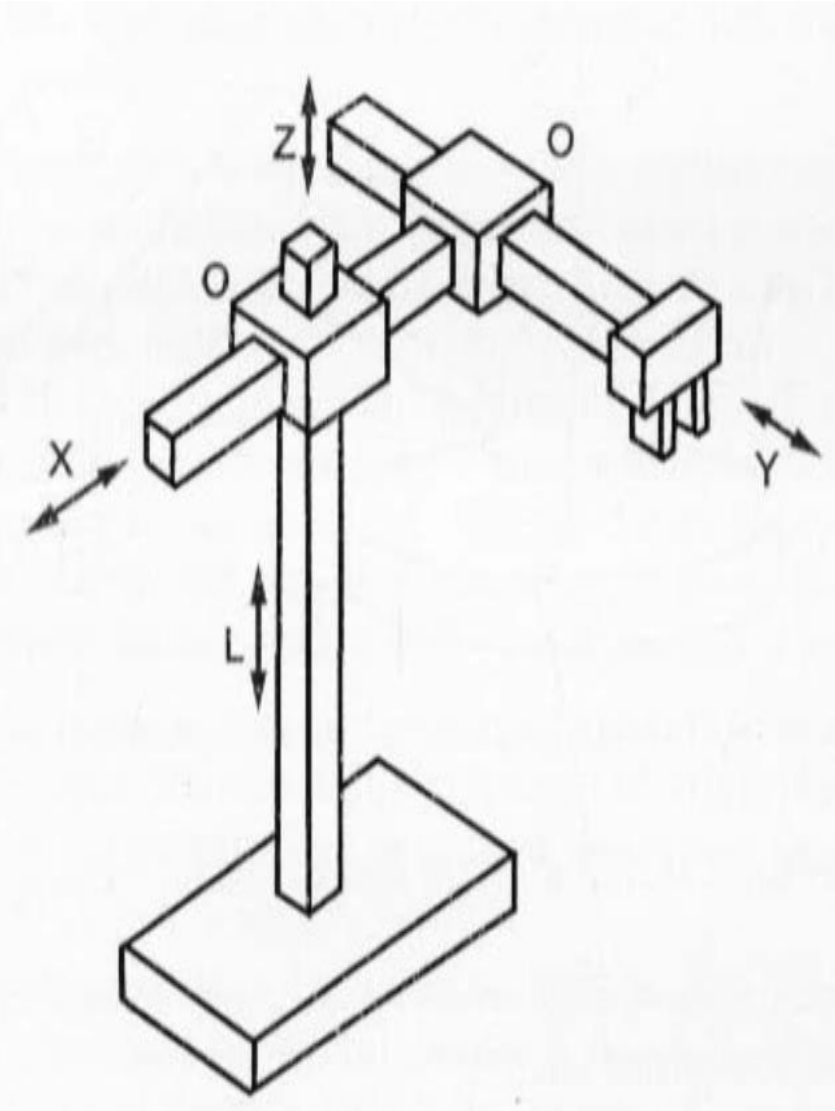

Jointed arm Configuration Robot

This type of configuration resembles the human arm where the column swivels about a base (the column and the base form a T-joint). The column top connects to the shoulder through a shoulder joint (which is the R-joint) and the shoulder connects to the elbow through an elbow joint (which is also an R-joint). Thus, this configuration has the capability to be controlled at any adjustments in the workspace.

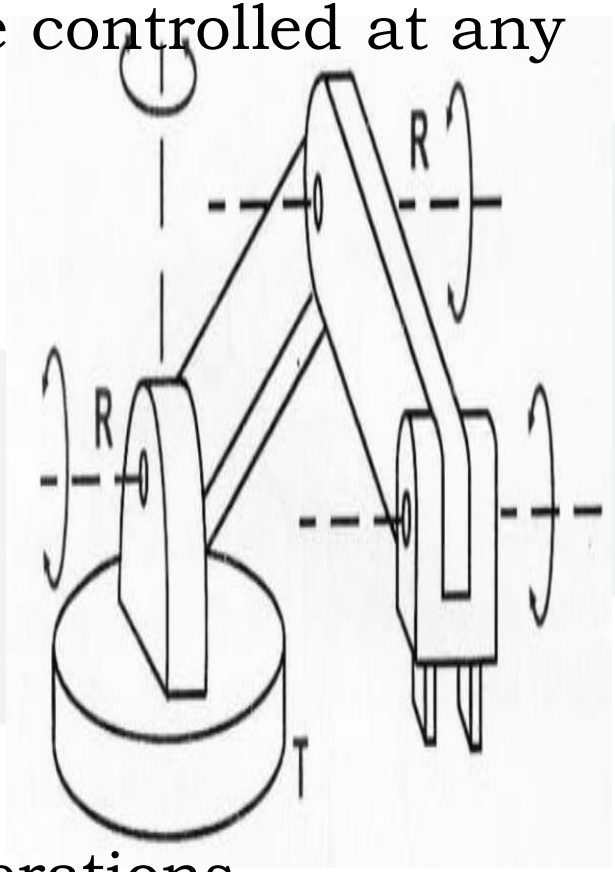

Advantages:

The work volume available is large.

Operation is quick.

Flexibility is increased.

Disadvantages:

Operating procedures are difficult.

Quite expensive type of configuration.

Number of components involved are more.

Applications:

To perform arc welding, spot welding, and spray painting operations.

Applications of Robot

I. Material / Part Handling Applications:

Most of the applications of the Robot fall under this category. Here the Robots are used to:

a. Transfer materials from one location to another location. Typical applications are as given below:

i. Pick-and-place application:

The most common and simplest application here is the pick-and-place application where objects are picked from one location and placed to another location.

ii. Palletizing application:

Another application that is slightly complex is the "Palletizing application" where the robot stacks products or carton boxes onto a pallet at various positions on the pallet to the required height.

iii. Depalletizing application:

Here the robot picks parts from an orderly stacked pallet to another location.

iv. Stacking application:

Here, the robots are used to stack parts one upon another. After each placement, the vertical position is re-calculated and the new stacking height is determined.

v. Insertion operation:

Here, the robots are used to insert parts into the compartments or spaces provided in a carton.

Applications of Robot

b. Machine loading/unloading:

In the machine loading/unloading application, a robot is used to move the work parts to and/or from the production machine.

The following three possibilities can be included for the loading/unloading application:

i. Machine loading:

In the loading operation, a robot is used to load parts into the production machine, but the unloading of the finished parts after completion of operations of the production machine is done by means other than the use of a robot.

ii. Machine unloading:

In the unloading operation, a robot is used to unload the finished parts that come out of a production machine, but the loading of the parts onto the production machine is done by means other than the use of a robot.

iii. Machine loading and unloading:

In this operation, a robot is used to both load raw parts into the production machine and unload finished parts from the production machine.

Industrial Applications of Robot

Industrial Applications of Robots for Machine Loading/Unloading

1. Die-casting: The robot is used to safely unload the parts from a die-casting machine with the safety gates closed. Other connected applications include cooling tasks or parting agent applications.

2. Forging: Forging is one of the toughest environments due to extreme heat, pollution, and noise. The use of a robot immensely helps to face this environment. The robot loads the red-hot billet onto the die of the forging hammer, holds it during the blows, and unloads it to a safe place away from the hammer.

3. Plastic injection moulding: A robot unloads parts from the injection moulding machine, cuts the runner, and drops the runner into the scrap area.

4. Sheet metal press operation (Press working): The robot loads a blank into the press, and after the press stamping operation, it unloads the scrap and throws it into the scrap area. The stamped parts from the blank fall into the container placed at the back of the machine.

5. Machining operations: The robot loads the raw blanks onto the machine tool and unloads the finished parts.

6. Heat treating: The robot loads/unloads parts to/from a furnace.

Industrial Applications of Robot

II. Processing operations

Robots are used to carry out the processing operations such as spray painting, spot welding, etc. by using a tool at its end-effector. The tools can be a spray painting gun for spray painting operation, a spot welding gun for spot welding operation, etc.

In processing operations, the robot manipulates a tool to perform a process on the work part.

Following are few processes that use industrial robots:

a. Spot Welding:

Spot welding is a metal joining process where two metal parts are squeezed together between two electrodes and subjected to a large amount of current to form a joint at particular points or spots. The end-effector of the robot here is the spot welding gun that applies the approximate pressure and current to the sheet parts to be welded. The spot welding robots have enough number of axes of motion to approach points in the work envelope at any angle. This was difficult to realize in a manned environment in the absence of robots. Spot welding is used largely in the automobile industry to weld automobile bodies such as car panels.

b. Arc Welding:

Arc welding is a metal joining process where metals are welded by using the heat generated by an electric arc. The welding here is continuous unlike spot welding. When arc welding is manually carried out, the conditions are difficult for the operators since they require Personal Protective Equipment like welding shield with special glass to avoid UV rays, are under the danger of operating at high temperatures involving high amount of heat and moreover they must be accurate in following the welding path. These problems are now overcome with the use of arc welding robots.

Industrial Applications of Robot

II. Processing operations

Robots are used to carry out the processing operations such as spray painting, spot welding, etc. by using a tool at its end-effector. The tools can be a spray painting gun for spray painting operation, a spot welding gun for spot welding operation, etc.

In processing operations, the robot manipulates a tool to perform a process on the work part.

Following are few processes that use industrial robots:

a. Spot Welding:

Spot welding is a metal joining process where two metal parts are squeezed together between two electrodes and subjected to a large amount of current to form a joint at particular points or spots. The end-effector of the robot here is the spot welding gun that applies the approximate pressure and current to the sheet parts to be welded. The spot welding robots have enough number of axes of motion to approach points in the work envelope at any angle. This was difficult to realize in a manned environment in the absence of robots. Spot welding is used largely in the automobile industry to weld automobile bodies such as car panels.

b. Arc Welding:

Arc welding is a metal joining process where metals are welded by using the heat generated by an electric arc. The welding here is continuous unlike spot welding. When arc welding is manually carried out, the conditions are difficult for the operators since they require Personal Protective Equipment like welding shield with special glass to avoid UV rays, are under the danger of operating at high temperatures involving high amount of heat and moreover they must be accurate in following the welding path. These problems are now overcome with the use of arc welding robots.

Industrial Applications of Robot

Other Processing applications: These include:

i. Grinding:

Here the end effector of the robot is the rotating spindle and the grinding wheel is mounted in the spindle chuck. The robot moves its arms relative to the workpiece and grinds the material of the workpiece. Manual grinding has problems like exposure of the operator to fast-moving tiny ground particles leading to damage to the eyes and face, requirement of intensive training, and grindmark patches. On the other hand, use of robots can give the perfect grinding finish with saving of time and absence of hazards. As a connected application, robots are used to polish surfaces using a polishing wheel.

ii. Drilling and other machining processes:

The end-effector is the rotating spindle and the cutting tool is mounted in the spindle chuck. Drilling a hole manually requires significant time and effort. Using robots in drilling helps to monitor drill speed, torque, countersinking, displacement, and breaking of bits. The monitoring is done by sensors on the robots. Aerospace industry uses robotic drilling due to the precision and productivity benefits. The only challenge of using robots in drilling and other machining operations is that the robot must handle the high cutting forces during machining. Robots are now used in other machining processes like routing, milling, etc. The end-effector here are spindles on which appropriate tools are mounted according to these machining processes.

iii. Plasma Cutting:

Plasma cutting is a process that uses high velocity ionized gas called plasma to heat and melt metals. The plasma later blows away the molten material mechanically to cut the workpiece which is usually one inch thick. Use of robots here results in high quality cuts at faster travel speeds. The plasma torch is attached to the robot as its end-effector.

iv. Laser Cutting:

Laser cutting is a process that uses a high power laser through optics to cut materials. The laser tool as an end-effector is attached to the robot. The result of robotic laser cutting is precision cutting with high repeatability and accuracy.

v. Waterjet Cutting:

Waterjet cutting is a process used to cut parts using a very high pressure stream of water. The nozzle ensures the high pressure of the water stream. When used with a robot, this nozzle becomes the end-effector and the arm moves in the programmed paths to achieve high quality cutting. Waterjet robots are used to cut various materials like metals, fabrics, board, plastic, etc. Waterjet robots are used in aerospace, automobile, textile, packaging, and food industries.

Advantages of Robot

1. Robots can be substituted for humans to work in hazardous work environments. *Example: During arc welding, in foundry environment, in powder coating environment, etc.*
2. Robots can produce greater quantity in a short span of time with consistency and accuracy that cannot be matched by humans.
3. Robots can work at constant speeds without any break which is not possible by humans.
4. Robots are capable of lifting heavy loads without getting tired or injured.
5. Robots can work in tight spaces where human reach is not possible.
6. Robots can be re-programmed with changed tooling to take up a different task after the end of a batch or a production run. In such cases, robots are better than fixed automation.
7. Accidents at the workplace are avoided since robots perform the risky jobs which were otherwise done by humans.
8. Since robots are controlled by computers, they can be integrated to other computer systems to realize Computer Integrated Manufacturing (CIM).
9. The usage of robots produces lesser or no defective parts and hence saves time of rework and money to the organization.

Dis-Advantages of Robot

1. Organizations have to make huge investments to introduce robots at their workplaces.
2. Since parts of a robot are made very precisely, their replacement is very difficult and to maintain, it costs huge amount of money.
3. To program and setup the robotic systems and robots, and to avoid unnecessary future problems and mishaps, it requires highly skilled technical engineers and programmers which again is a significant cost for the organization.
4. Unless the level of the artificial intelligence is highly sophisticated, robots may not be able to respond properly during times of emergency, during times of accidents or when an unexpected variance occurs.

END